Luxury Fireplaces

DIAMOND

G-**FX**-COBALT



Supplied with both Chrome and Black handles as standard, allowing you to choose the perfect finishing touch.

An optional Black slider cover is also available (Code 110442)

For rear flue installations, order the G-**FX** Cobalt Gas Stove **Rear Flue & Closure Kit *(Code: 106925)**

Powered by: G-**FX**

W484mm | H600mm
D (Rear Flue) 300mm
D (Top Flue) 367mm

G-FX
opulent gas fires

Model	Gas Type	Code	Width	Height	Depth	Engine	Visible Glass Area (mm)	Heat Output
G-**FX**-Cobalt - Top Flue	Natural Gas	106917	464mm	600mm	367mm	G-**FX** gas	336mm x 307mm	3.1kW
G-**FX**-Cobalt - Rear Flue	Natural Gas		464mm	600mm	300mm	G-**FX** gas	336mm x 307mm	3.1kW

EFFICIENCY

Natural Gas: **82%** EEC:D

MIN / MAX OUTPUT

Natural Gas: min 1.8kW max 3.1kW

Natural Gas

Conventional Class 1 & 2

Top Flue

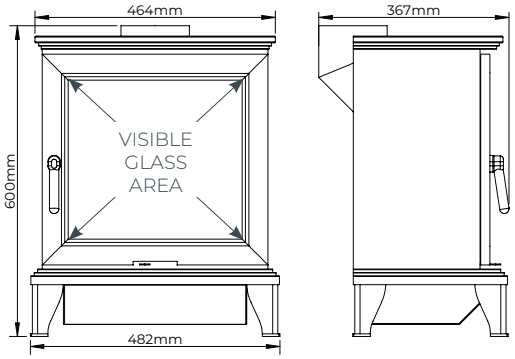

Rear Flue & Closure Kit

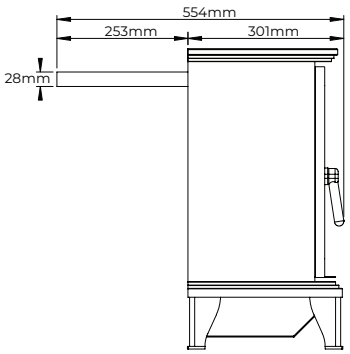

G-**FX** Cobalt Gas Stove Rear Flue & Closure Kit | Pre Cast Flue Kit - Code: 106925 | Optional Black slider cover (Code 110442)

REAL FLAME. REFINED LIVING.

Smartslide Control | High Efficiency – Glass Fronted

Flue Types: Conventional 1 & 2, Pre-Cast | Gas Types: Natural Gas

Extended 5 Year Warranty upon Registration | Flame Failure Device

Oxygen Depletion Sensor | UKCA Approved