bemodern
FIRES I FIREPLACES

800CF GAS LOG FIRE

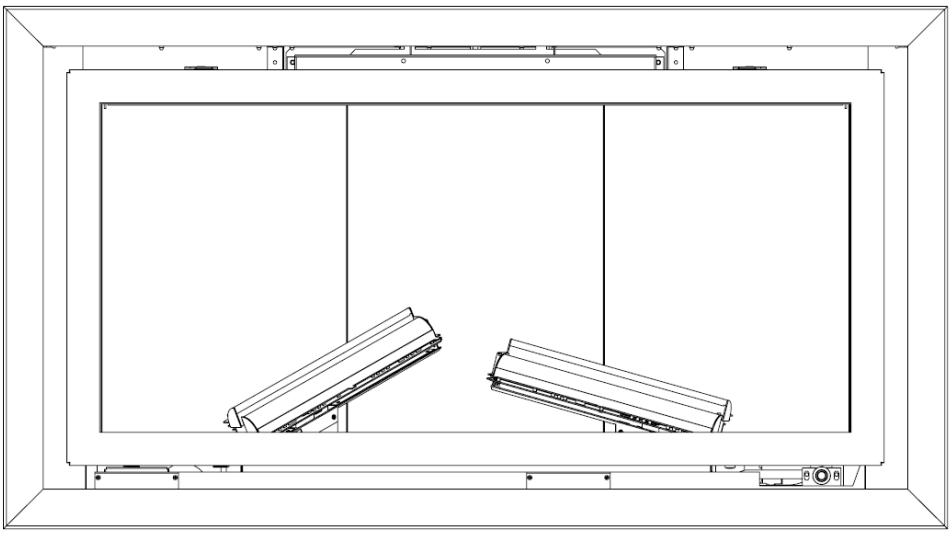

USER INSTRUCTIONS
INSTALLATION INSTRUCTIONS
SERVICE INSTRUCTIONS

Do not use this appliance if the front glass panel is broken, removed or fitted incorrectly.

It is a regulation that these instructions be handed to the customer after installation is complete. It is also the responsibility of the installation engineer to ensure that the customer is able to fully operate the appliance and is aware of any cleaning or maintenance requirements.

Model numbers: BM-121XX2 SLIDE for use on Natural Gas (G20) at a supply pressure of 20mbar in GB
Model numbers: BM-122XX2 SLIDE for use on Propane (G31) LPG at a supply pressure of 37mbar in GB

(X denotes trim type)

THIS INSTRUCTION MANUAL MUST BE LEFT WITH THE CUSTOMER AFTER INSTALLATION

This product is not suitable for primary heating purposes.

Contents

USER INSTRUCTIONS

1.0 Appliance Commissioning Check List 3

2.0 User Instructions—Important information & Warnings 4
2.1 User Instructions—Controls & Operation 5
2.2 User Instructions—General Maintenance & Cleaning 6
2.3 Log Layout Instructions 9
2.4 Running in and Troubleshooting 14

INSTALLATION INSTRUCTIONS

3.0 Unpacking the appliance 15
3.1 Regulatory Information 16
3.2 Efficiency and Appliance Technical Information 16
3.3 Installation Requirements 17
3.4.0 Siting the Appliance 18
3.4.1 Hearth Requirements 18
3.4.2 Checking the Flue 18
3.4.3 Fireplace Openings 18
3.4.4 Clearance from combustibles (Installation) 19
3.4.5 Back Panel Requirements 19
3.4.6 Debris 19
3.5 Ventilation Requirements .....
3.6 Gas Supply 19
3.7 Installation into studding 20
3.8 Flue Liner Installation (Optional) 21
3.9 Installation Methods 24
3.9.1 Slim Trim Installation 25
3.9.2 Slim Trim Back Panel Requirements 26
3.9.3 Wide Trim Installation 27
3.9.4 Wide Trim Back Panel Requirements 28
4.0 Fixing the Appliance—Cable Fixing 29
4.1 Fixing the Appliance—Screw Fixing 30
4.2 Connecting the Gas Supply 31
4.3 Log Layout Instructions 34
4.4 Lighting the Fire 39
4.5 Check for Spillage 40
4.6 Combustible Shelf 41
4.7 Complete the Installation 42

SERVICING INSTRUCTIONS

5.0 Servicing the Appliance 43
5.1 Removal the Burner Tray 44
5.2 Removal of the Gas Valve 46
5.3 Removal of Pilot 48
5.4 Removal of Spark Generator 48
5.5 Removal of the Tee Valve (High Setting) 49
5.6 Removal of the Injectors 50
5.7 Debris Removal 53
6.0 Record of Annual Services 54

7.0 Product Fiche 55
8.0 Manufacturers Instructions and User Replaceable Spares 56

1.0 APPLIANCE COMMISSIONING CHECKLIST

It is the installers responsibility to complete the following checklist when commissioning this appliance. The information recorded on this page may be requested at the time of any warranty call made. If the information is not made available it may affect the warranty support for the customers appliance.

CHECK LISTS	PASS	FAIL
Check flue is suitable for this appliance		
Check flue flow prior to installation		
Check spillage after installation		
Check standing gas pressure		mbar
Check working pressure on full rate (NAT GAS Min. 18.5mbar) (PROPANE Min. 35mbar) Ensure all other gas appliances are running on full rate		mbar
Complete relevant section of warranty forms , ensure it is complete with Gas Safe registration details.		
Instruct the customer on lighting, maintenance and servicing procedures. (Including glass removal and ceramic placement)		

Appliance Serial Number	
Installation Date	
Gas Engineer Name	
Gas Safe Engineer Registration No.	
Gas Safe Engineer contact No.	

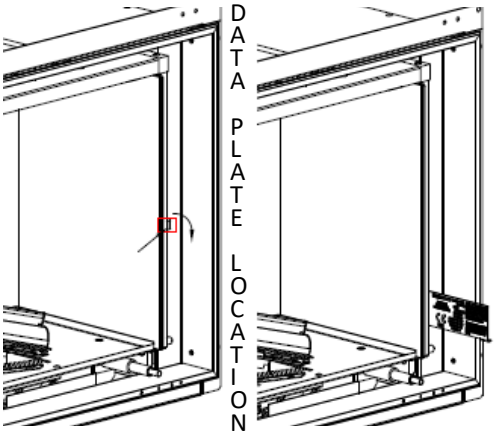

If you can smell gas, immediately turn off the gas supply using the control valve at the meter in your home. Do not smoke and turn off all sources of ignition, i.e. boilers or gas hobs. Open windows and doors to ventilate the room or building.

Call the Gas Emergency Service 0800 111 999 (England Scotland and Wales)
0800 002 002 (N. Ireland)

Welcome

2.0 Congratulations on the purchase of your new Be Modern 800CF gas fire. Ensure you keep these instructions in a safe place as they will be required for installation, service and general upkeep of your appliance.

These instructions should be followed precisely to ensure that you receive many years of trouble free service from your appliance.

Some general maintenance is required by the user to keep the appliance in its best condition, these are detailed later in this instructions manual.

Important

This gas appliance MUST be installed by a GAS SAFE registered installer by law. It must be installed in accordance to these installation instructions and the GAS SAFETY (Installation & Use) REGULATIONS 1998 as amended. Non compliance of this law may lead to prosecution and it is in the interest of you and your family that this condition is observed. Check with your gas installer that they have current membership to Gas Safe and that their membership includes gas fires.

It is very important that you also have your gas appliance serviced annually by a Gas Safe registered engineer. During this service the engineer will check the operation and performance of the appliance and also for any debris that may have collected behind the appliance. This is important for you and your families safety

Check for the Gas Safe logo on your gas engineers membership card.

Warnings

Do not place soft wall coverings (i.e. embossed papers etc,) furniture or other combustible items too close to the fires as they may discolour or scorch.
Do not place or throw rubbish or otherwise on the fuel-bed.
Do not place any combustible materials or flooring (i.e. carpets etc,) on any part of the hearth.

Many parts of this appliance and some surrounding areas will be come hot during use.

This appliance has a naked flame and as with all heating appliances a fireguard should be used for the protection of children, the elderly and infirm. The fireguard should conform to BS8423 : 2002 (Fireguards or use with Gas Heating Appliances).

It is quite normal for a flame effect gas appliance to experience a small amount of soot or staining to some parts of the fuel effect components. If this becomes excessive it may because the fuel bed is not fitted correctly — this should be checked according to these installation instructions prior to contacting a service engineer.

NEVER place any rubbish or otherwise onto the fire—this will affect the way the product operates and may affect the warranty of the product.

NEVER place more ceramic components onto the fuel bed than specified in the instructions.

NEVER touch the ceramics when the appliance has recently been switched off—these components retain heat and may cause burns. Leave the appliance to sufficiently cool prior to any contact of the ceramics.

Ventilation

No purpose made ventilation is normally required for this appliance when installed in G.B. If the appliance is being installed in I.E then refer to I.S 813:1996 (Domestic Gas Installation—National Standards Authority of Ireland). Ventilation areas (if applicable) should be checked periodically to ensure there is no obstruction, even though none is normally required for this appliance.

Controls

2.1 This appliance has a concealed slide control knob. It is discreetly concealed in the space between the decorative trim and the glass door frame on the lower right hand side. Simply press the knob and it will protrude from its current position to enable operation.

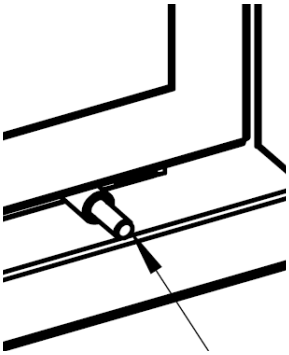

The knob will slide from left to right, this movement controls all functionality of the appliance, from ignition, flame control and turning the appliance off. When the desired operation is complete, simply press the knob inwards and it will return to its stowed position.

Lighting

Slide the control knob to the left to the ignition symbol. After a few seconds the pilot light should light.

If the pilot light does not light, release the control knob and wait for 3 minutes before reattempting. If the pilot does not light after 3 attempts, check the battery—see page 6. If the battery is new and the pilot still fails to light, contact a gas safe engineer.

Once the pilot is lit, keep the lever pushed to the left for up to 10 seconds then release. The pilot should stay lit and the central and front log burners will now light.
The appliance is now running at the LOW setting.

Slide the knob slowly to the right to turn the rear log burners on. The appliance is now running at the HIGH setting.

To turn the fire off, slide the lever all the way to the right to the OFF symbol.

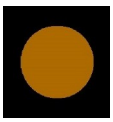

Should the spark generator fail to provide a spark at the electrode it may be that a small amount of soot has fallen from the fuel bed onto the pilot assembly, causing a short circuit. If this is the case, ensuring the appliance is off and cold, this area can be cleaned with the thin nozzle from a vacuum cleaner. See page 8 for details on glass removal to access this area.

Alternatively check the battery is in good condition—see page 6 for details.

Battery

2.2 This gas appliance uses a single AAA type battery which supplies the power for the spark generator used during the ignition process. The battery box which houses this battery is located between the decorative frame and the glass door panel in the lower left hand corner. It may be necessary to remove the trim to release the battery cover. (See pages 25-27)

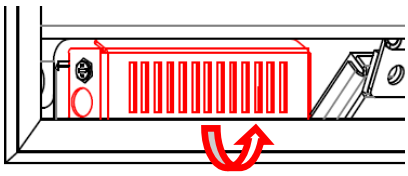

The battery is accessed by lifting the flap from the bottom edge. Remove battery and replace where necessary ensuring the correct polarity.

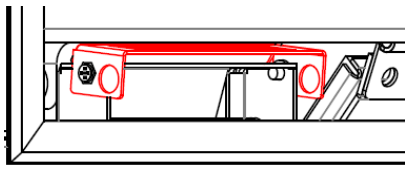

Trim

There are two trim types available for this appliance. For full details on the trim removal see pages 24 and 26. If the trim is removed, always ensure it is stored somewhere safe where it cannot be damaged.

Glass Door

The glass door can be removed for cleaning or to access the ceramic logs and pilot area for maintenance.

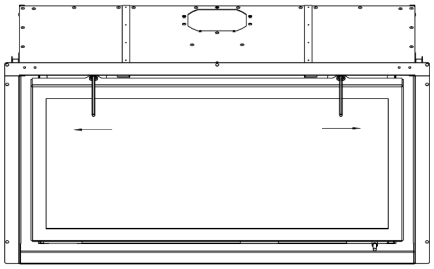

The special Allen key supplied with the appliance should be used to release the two door clasps features at the top of the door. Insert the Allen key into the nut and rotate. The left hand nut should be rotated to the left and the right hand key to the right, as shown.

Once released, the door will open on its lower hinge. Slowly open the door until it comes to rest. It is possible to clean the glass while it is in this position.

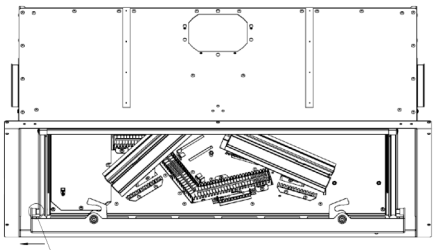

It is now possible to remove the complete door assembly if required.

With the door clasps released, slide the door frame to the left so that it comes off the left hinge pin.

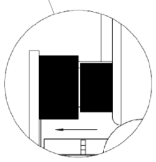

Now slide the door frame to the right so it comes off the right hinge pin. The door will now come away from the appliance.

Store the door where it cannot be damaged.

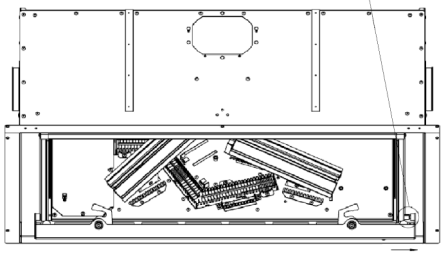

Never run the appliance with a damaged or broken glass panel

Cleaning

Cleaning is recommended for some parts of this appliance. The glass can be cleaned with a non abrasive glass cleaner and lint free cloth. Metal parts can be cleaned with a lint fee damp cloth.

Fuelbed

HEALTH AND SAFETY NOTICE

This appliance uses fuel effect pieces manufactured from Refractory Ceramic Fibres (RCF). Care must be taken to avoid excessive exposure to these materials as they may cause irritation to the eyes, skin, nose and throat. When Handling avoid inhaling and contact with skin and eyes. It is recommended that disposable gloves are worn in addition to a facemask and eye protection. After handling wash hands thoroughly and any other exposed parts which may have come in to contact with the material.

If a vacuum cleaner is used to clean the fuel bed or areas around the appliance there fragments of the material may have fallen it is recommended that it be of the type fitted with a **HEPA** filter.

Care should be taken when disposing of RCF materials. It is important to keep any dust to a minimum so it is recommended that the fuel effect components are placed into a heavy duty plastic bag. The bag should be clearly labelled **RCF WASTE**. These materials are not classified as hazardous waste and should be disposed of at a site approved for the disposal of industrial waste.

The fuel effect components supplied with this product are extremely fragile and must be handled with great care. The ceramics in this appliance are not covered by the warranty due to their fragility. This includes the RCF fibre boards in the fire box. These components will break or chip if not handled with the greatest of care.

Cleaning of these components should only be undertaken once the appliance is switched off and has been allowed to cool for a minimum period of one hour. The components should be lifted carefully piece by piece from the appliance and placed onto a dust sheet or similar. They can be brushed gently with a soft brush to remove any dust or deposits. If you intend to use a vacuum cleaner then this should only be done once the loose deposits of soot etc have been removed. Ensure that the moulded components are structurally sound and no significant part of the moulding has broken away. If any component has broken then it should be replaced before using the appliance. Only the correct replacement part as supplied by the manufacturer shall be used in this appliance. Do not add any additional components to the fuel bed layout. It is important to note that small hairline cracks will appear in the surface of the ceramics due to heat expansion and contraction—this is perfectly normal.

See the full details of log and fuel bed installation on page 9 for removal and replacement of the ceramic log and bark components.

pilot

It may be necessary to clean areas around the pilot assembly. If the appliance is running and then turns itself off automatically for no apparent reason, it may be that the O.D.S (oxygen monitoring device) has become partially blocked and may need to be cleaned.

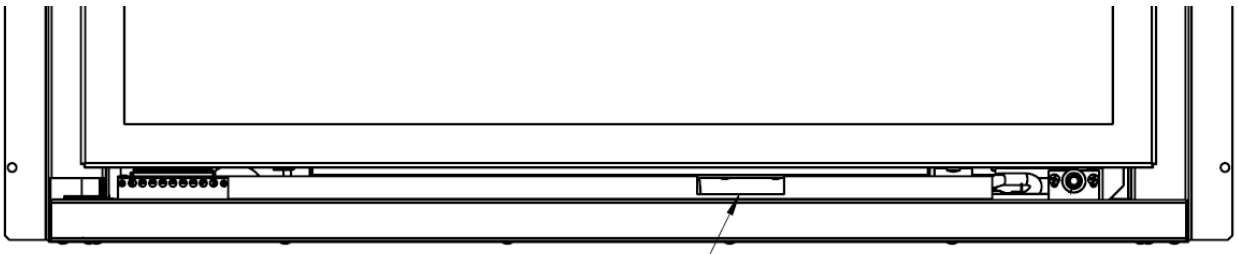

Location to clean pilot aeration

The pilot and aeration hole which needs to be cleaned can be seen through this slot.

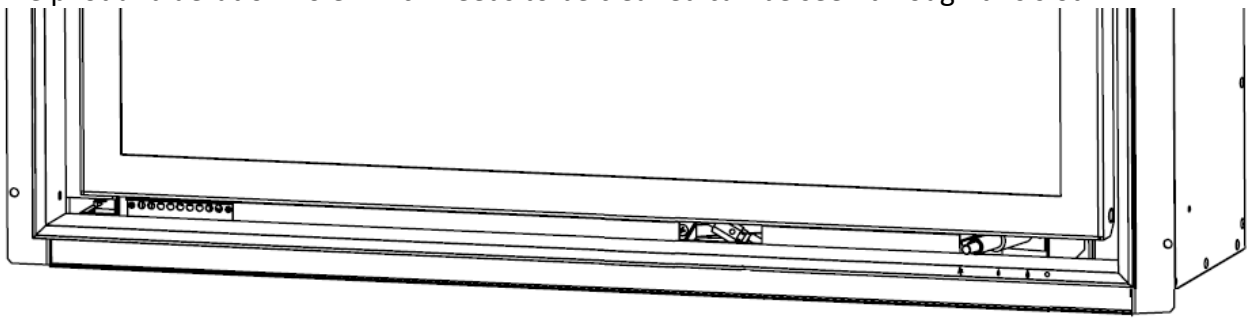

The pilot to this appliance has a small aeration hole at its base, sometimes lint and dust can be draw in with the air supply to the pilot.

To reduce the occurrence of such lint ingestion it is recommended that the area directly in front of the appliance is cleaned regularly. This problem can be worse where wooden floors are present, as lint is more free to move on these areas. Pet hair can also cause this problem.

Using a thin nozzle on a vacuum cleaner this area can be cleaned to remove any lint build up. Apply the end of the nozzle to the aeration hole for up to 2 minutes, regularly removing and reapplying the tip of the nozzle to vary suction.

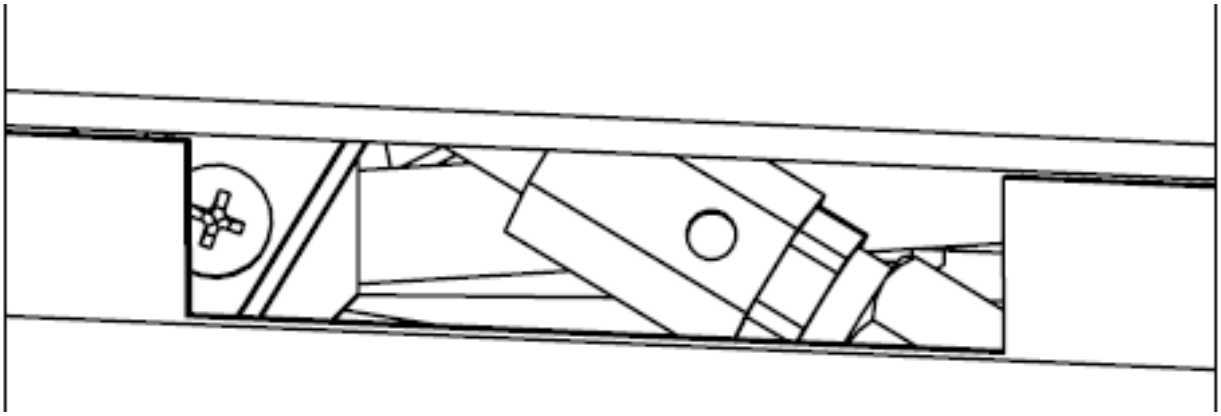

If this procedure does not resolve such a problem then the pilot assembly will need to be replaced. This must involve the installation of the same part as supplied by the manufacturer. Excessive lint build up which results in appliance operational problems is not covered by warranty. It is important to ensure this preventative maintenance is performed regularly.

LOG SETUP

2.3 The following instructions detail how the ceramic fuel bed and loose components are to be installed onto the appliance. Great care should be taken when handling these ceramic parts as they are fragile and can easily be broken. Do not force any component into position, if it does not fit easily then you are not fitting the part correctly. These instructions can also be followed to remove or reinstall the fuel bed after cleaning. This is a procedure that can be undertaken by the customer as required and the frequency will be depend upon use.

See page 6 for glass door removal and installation.

The fuel bed setup involves the installation of volcanic rock, ceramic bark, ember wire and a boxed set of ceramic decorative logs. These components will have been installed by your gas engineer at the point of installation, however it is permitted for the end user to remove clean and replace these components as necessary. The following installation instructions must be adhered to at all times.

The following diagram is for identification purposes. It is imperative that the logs are placed in the correct position for safety and also to ensure that you obtain optimal performance from your appliance.

IDENTIFY

FUELBED

Place the volcanic rock on top of the centre burner as shown. Ensure a 4-5 mm gap is left between each piece. Then using **half** of the glowing ember wire supplied, ruffle between fingers to make it loose, about 20mm wide and as long enough to cover the volcanic rock then align over the rock as shown. Ensure no wire is placed within 25mm of the pilot assembly. Retain the other half of the wire for replacement at annual service.

Place Log A in the orientation shown ensuring it fits neatly into the locating features as shown below.

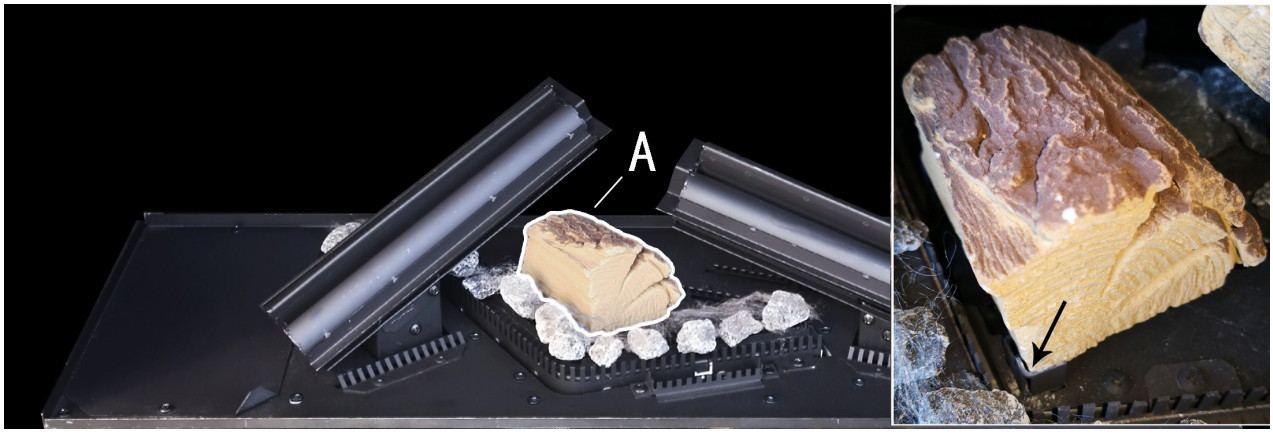

Place Log B onto the left raised burner as shown ensuring it fits securely.

Place Log C onto the right raised burner as shown ensuring it fits securely.

Place Log D in the orientation shown ensuring the branch sits just in front of the air hole in the main log as shown.

Place Log E in the orientation shown. Check that the charcoal area of this log sits just above the air hole as shown in the picture. Align the peak of log E with the pit on the edge of log C

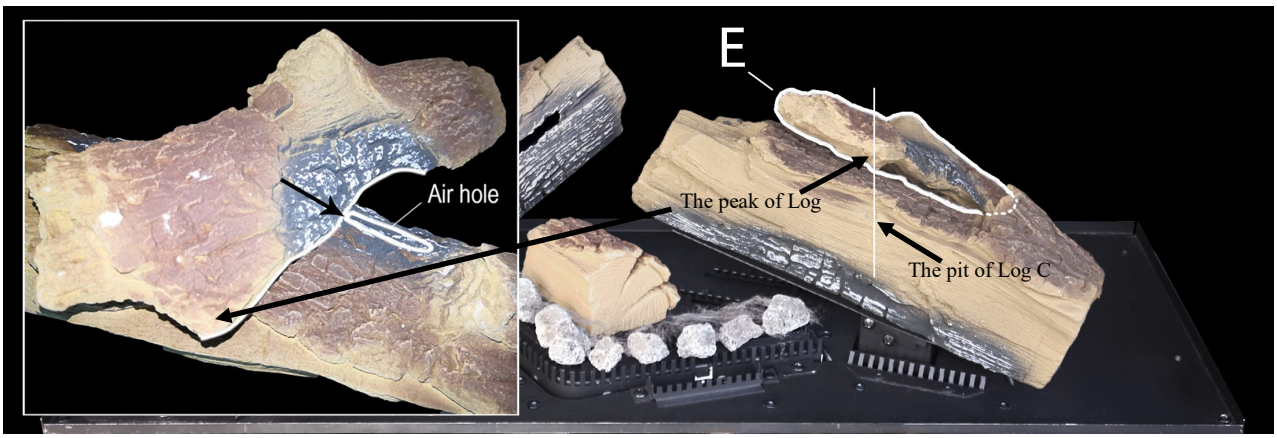

Place Log F onto the burner bed in front of the centre burner as shown.

bark

Place the bark around the fuel bed as shown. Ensure that no bark can interfere with the pilot operation.

Place Log G as shown in the picture.

Place Log H onto the burner bed as shown.

Place Log I onto the burner bed as shown.

Running in

2.4 When this appliance is first used it is important to note that you will experience some fumes and smells in the room of operation. Any fumes emitted during the first few minutes of use can be quite pungent and it is advised that a window is opened until this subsides. Smells associated with paints, oils and starch from ceramic components may last several hours but will rapidly diminish over the first few uses of the appliance.

It is advisable that the appliance is always run on high for a period of at least 20 minutes before turning to low, to ensure optimal flue performance and to reduce the possibility of sooting.

It should be noted that as with all flame effect gas appliances, some sooting can be evident and can be cleaned away—see cleaning instructions on previous pages.

Trouble shooting

The following table should be used to identify any problems experienced with the operating or running of your appliance prior to contacting the manufacturer or retailer regarding service.

THE FIRE WILL NOT LIGHT

Can you hear a continuous clicking during the ignition process?	YES ⬇	NO Check Battery
Does the pilot light?	YES ⬇	NO Check and remove soot or *ember wire* near the pilot
Does the pilot go out when the lever is released?	YES ➡	Try again, but before releasing the lever give a firm push to the left before releasing the lever.

THE FIRE GOES OUT

Does the fire light and run ok then subsequently turns off automatically	YES ➡	The pilot aeration may have become blocked refer to page 8

VISUAL PROBLEMS

Does the flame picture look wrong?	YES ➡	Check log placement as per the user instructions see pages 9-13
Does the glass have grey water marks on inside surface?	YES ➡	The glass will require infrequent cleaning dependant on use. See page 6 to open door.
Do you see marks or discolouration above the centre of the appliance?	YES ➡	The gas fire is spilling, turn the unit off and call for your gas safe engineer.

warranty

The Be Modern 5 year limited guarantee is managed directly by Be Modern Ltd. With our experienced Gas Safe engineers and through our extensive network of service centres throughout the UK we will ensure your appliance receives the right care should anything fail prematurely. Choose Be Modern for style, performance, reliability, value and peace of mind.

Unpacking appliance

3.0 TAKE GREAT CARE WHEN UNPACKING THE APPLIANCE—SOME PARTS CAN BE EASILY DAMAGED.

Once the carton has been opened, carefully remove the polystyrene packing components to reveal the appliance.

The appliance has two handles, one on each side, as shown in the diagram below. **These handles are for initial handling only, they should be removed prior to the installation into the fireplace opening.**

The **800CF Slim Trim** is supplied with the appliance. The **800CF Wide Trim** is an optional extra.

Carefully remove the **800CF Slim Trim** from the mouth of the appliance. If the **800CF Wide Trim** is being fitted, this can be discarded.

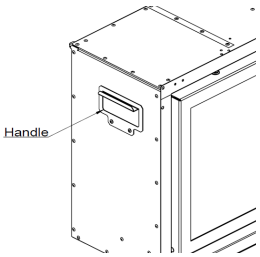

Carefully lift the appliance from the carton using the handles then remove and check the accessory packs before commencing the installation.

There will be **five** plastic bags also located in the carton:

Instructions and guarantee registration form. Note that the guarantee registration can be performed online at:
https://www.elginandhall.co.uk/advice/warranties/

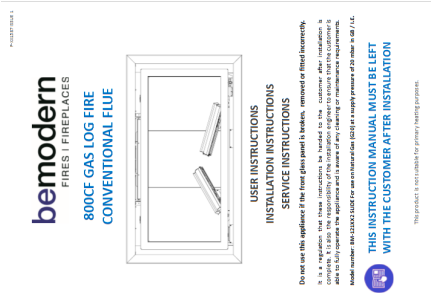

TOP VENT ACCESSORIES			
Item	Picture	Description	Qty
1		Flue Collar	1
2		Flue Closure Plate	1
3		M5 Flange Nut	3
4		ST4*8 Screw	3
5		Flue Liner Clamp	1
6		Socket Driver	1

EDGE TRIM FIXINGS			
Item	Picture	Description	Qty
1		Edge Trim Retaining Bracket	2
2		ST3*6 Screw	6
3		M4 Nut	6

TOOLS & FITTINGS PACK			
Item	Picture	Description	Qty
1		Fire Retaining Cable	2
2		Cable Clamp Nut	2
3		M6 Nut	2
4		M4*6 Screw	2
5		Eyebolt	4
6		Hollow Bolt	2
7		Rubber Grommet	1
8		Foam Seal	1
9		Aluminum tape	1
10		Isolation Elbow	1
11		Wooden Wall Plug	9
12		ST5*40 Wood Screw	9
13		Allen Key To be left with the customer after installation is complete	1
14		Ember Wire	1

EFFICIENCY PACK			
Item	Picture	Description	Qty
1		Efficiency plate	1

REGULATORY INFORMATION

3.1 NOTE THE FOLLOWING PRIOR TO THE INSTALLATION OF THIS APPLIANCE.

This gas appliance **MUST** be installed by a GAS SAFE registered installer by law. It must be installed in accordance to these installation instructions and the GAS SAFETY (Installation & Use) REGULATIONS 1998 as amended. Non compliance of this law may lead to prosecution and it is in the interest of you and your family that this condition is observed.

The installation of this appliance must be in accordance with the relevant parts of the LOCAL AND NATIONAL BUILDING REGULATIONS as issued by the Department of the Environment or BUILDING STANDARD (Scotland Consolidation) REGULATIONS issued by the Scottish Development Department and the following relevant British Standards:

BS5871	Part 2 Installation of Inset Live Fuel Effect Gas Fires
BS5440	Parts 1 & 2 Installation of Flues and Ventilation
BS6891	Installation of Gas Pipe-work
BS6461	Part 1 Installation of Chimneys and Flues
BS1251	Open Fireplace Components
BS715/BS EN 1856-2	Metal Flue Boxes /Metal Flue Pipes for Gas Appliances
BS EN 1858	Chimneys Components & Concrete Flue Blocks
IS813:1996	Domestic Gas Installation (Republic of Ireland)

Efficiency /Technical

3.2 The efficiency of this appliance has been tested to EN613 and the result is Natural Gas 82.3% net (74.1% gross) Propane LPG 82.1% net (75.5% gross) This efficiency value has been verified by Kiwa (0558). This efficiency value can be used for SAP (Standard Assessment Procedure) for energy rating of UK dwellings.

Appliance Data		
Gas Type	Natural Gas (G20)	LPG Propane Gas (G31)
Inlet Pressure	20mbar ±1mbar	37mbar ±1mbar
Gas Connection	8mm pipe	8mm pipe
Injector	1 X 1.1 4 X 0.98	1 x 0.7 / 4 x 0.58
Pilot c/w microswitch	P-XX1312A2	P-XX1319-L4
Input High Rate (Gross)	6.6kW (0.629m^3/hr)	6.6kW (472g/hr)
Input Low Rate (Gross)	4.6kW (0.438m^3/hr)	4.3kW (307g/hr)
Battery Type (Electronic Igniter)	AAA	AAA
Countries of Destination	GB	GB
NOx mg/kWh input (GCV)	120	120

GAS CATEGORY	COUNTRIES OF DESTINATION PERMITTED WITH THIS APPLIANCE CONFIGURATION
I_{2H}	AT CH CZ DK EE ES FI GB GR HR IE IT LT LV NO PT RO SE SI SK TR
I_{3P}	AT CH CZ DE ES FR GB GR HR HU IE IT LT NL PL PT RO SI

Installation Requirements

3.3 Prior to installation ensure that the gas supply is compatible with the appliance, this appliance must only be used on the gas type marked on the data plate of the appliance and the carton.

Model number **BM-121XX2** is suitable ONLY for **Natural Gas (G20)** at a supply pressure of 20mbar and model number **BM-122XX2** is suitable ONLY for **Propane LPG (G31)** at a supply pressure of 37mbar.

This appliance can be installed below a masonry chimney which must be constructed of non-combustible materials confirming to BS1251 or into a suitable non-combustible chamber with prefabricated flue complying with the requirements of BS715 / BS EN1856-2. The appliance can also be installed in front of a class 1 builders opening.

The flue or chimney must be at least 3 metres in height and if previously used for the burning of solid fuel (e.g coal or wood) should be swept before. The chimney must only serve as a flue-way to this appliance and must have no openings to any other room. The opening should be inspected and any exposed brickwork should be repaired where necessary. Ensure that the chimney/flue only serves one fireplace. Remove or securely fix open and dampers or register plates.

The flue should be checked for draw using a smoke bomb or similar, if there is a definite draw then the installation of the appliance can proceed.

SITE REQUIREMENTS

3.4.0 This appliance can be installed into a suitable fireplace or as a 'Hole in the Wall' (HIW) type installation. For both types of installation the chimney or flue must be either Class 1 (brick chimney or 7" diameter flue) or Class 2 (5" diameter flue) The minimum effective height of the flue must be 3 metres, (10'). The flue must be clear of obstruction and if the previous installation was intended for solid fuel it must be swept prior to this installation proceeding.

Typical installations will use the rear exit flue for 7" diameter unlined chimneys. However, this appliance can be installed with a 127mm (5") liner directly to the top of the appliance. This liner (if fitted) must extend from the appliance to the flue terminal. For this type of installation a minimum of 2m flue height is required.

hearth

3.4.1 If the base of this appliance is to be installed at a height less than 225mm then a hearth constructed of non combustible materials must also be installed which is a minimum of 12mm in thickness, extends a minimum of 200mm in front of the appliance and 150mm each side of the appliance. This appliance must not be installed directly onto carpet of other combustible floor materials. HIW installations can legally be installed without a hearth, however we recommend some form of physical barrier be used to ensure no close proximity can take place.

Check The flue

3.4.2 Use a smoke pellet prior to the appliance installation to ensure the viability of the flue and check that the smoke can be seen being emitted from the terminal / chimney pot outside. There must be no leakage of smoke through the structure of the chimney/flue during or after the smoke pellet test and it is important to check inside upstairs rooms adjacent to the chimney / flue. Check the chimney pot / terminal and general condition of the brickwork or masonry. If the chimney or flue is in poor condition or if there is no up-draught do not proceed with the installation. If there is a history of down-draught conditions with the chimney / flue, the installation of a tested and certificated flue terminal or cowl suitable for the relevant flue type

fireplace openings

3.4.3 The following drawings shows the firebox dimensions of the appliance and the recommended **fireplace openings** required for installation. Note, these dimensions are to ensure clearance of the appliance body into the fireplace opening.
Check back panel / slip details on page 26 & 28 for further details of these dimensions depending on 800CF Slim or 800CF Wide installation type.

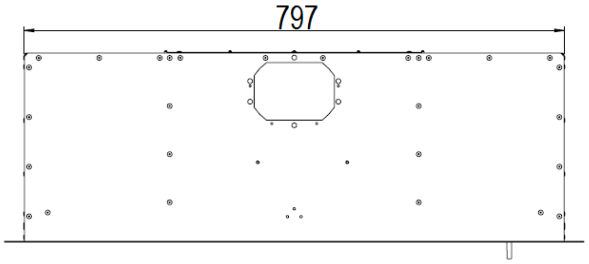

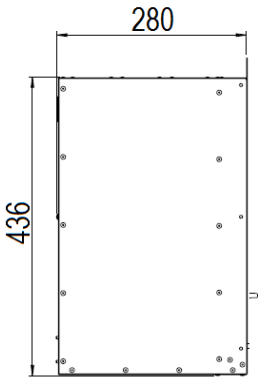

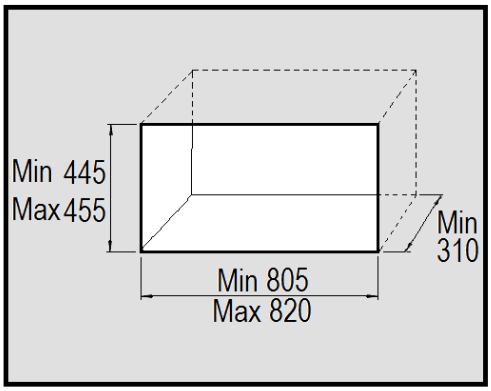

combustibles

3.4.4 The following diagram shows the area which must be clear of all combustible materials.

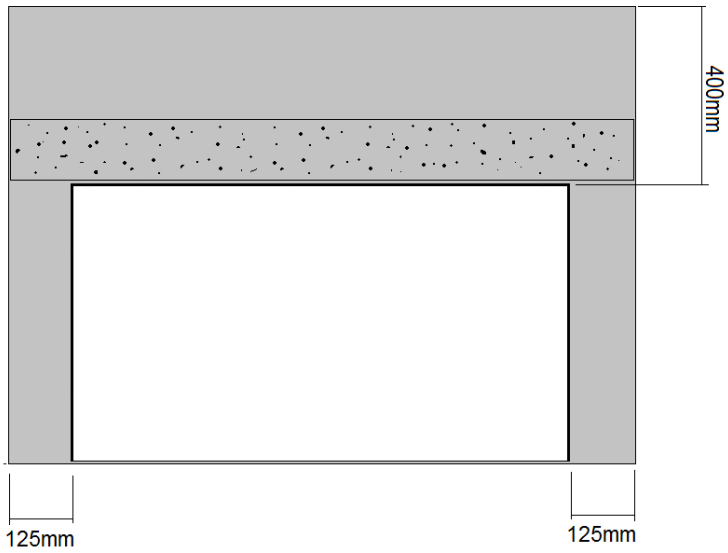

BACK PANELS

3.4.5 If the appliance is being fitted with the flange against slips or a back panel, it must be of a suitable material. The back-panel must be able to withstand 150°C continuously or be 'O' rated (fire retardant). It is recommended that this back panel is constructed of 4 sections then re-bonded as a single panel to provide the correct opening size and make the installation easier. Single piece back-panels or backing slips are highly likely to crack in time and no responsibility will be held by the appliance manufacturer for such installations.

debris

3.4.6 A clearance of at least 32mm is required behind the appliance to ensure adequate debris collection volume is attained and provide to clearance when venting from the rear exit. When connected to the 5" liner or to 5" flue pipe this is not required.

ventilation

3.5 No purpose made ventilation is required for this product as the net nominal input does not exceed 7.0 kW, however if spillage is detected during the installation commissioning it may be necessary to provide some additional ventilation. Always check the current rules in force for the country of installation.

Gas supply

3.6 This appliance is suitable for use on EITHER

Natural gas (G20) from a governed meter **BM-121XX2**

Or

Propane (LPG) gas (G31) **BM-122XX2**

This appliance must only be used on the gas type marked on the data plate of the appliance and the carton.

It is the responsibility of the installer to ensure that correct pipe sizing has been supplied to the site for correct performance. 8mm diameter ductile copper tubing should be used for the run to the appliance at a maximum length of 500mm to avoid pressure drops. The appliance is supplied with a restriction device which must be used as part of the installation. There should be no soldered joints within the firebox of the appliance.

studding

3.7 It is also possible to install this appliance into a studded cavity providing it complies to the following requirements:

- The installation must have an insulated flue with a minimum diameter of 125mm (5”) diameter and a minimum effective overall height of 3 metres and comply with BS EN 1856-2 (metal flue pipes for appliances). **Under no circumstances should a flexible liner be used in this type of installation.**
- The top outer face of the firebox should be insulated to prevent heat loss with a layer of mineral wool insulation or similar.
- The appliance must stand on a non-combustible surface with a minimum thickness of 12mm.
- The cavity void must be well ventilated with provision for airflow to enter and exit at the base and top of the enclosure. The minimum ventilation should be 100cm^2 at the base and 100cm^2 at the top.
- Ensure that non combustible board is used to create the opening for the appliance and at least 200m each side and 75mm at the rear of the appliance must be maintained to allow airflow around the appliance.
- No combustible materials should be used within this opening.

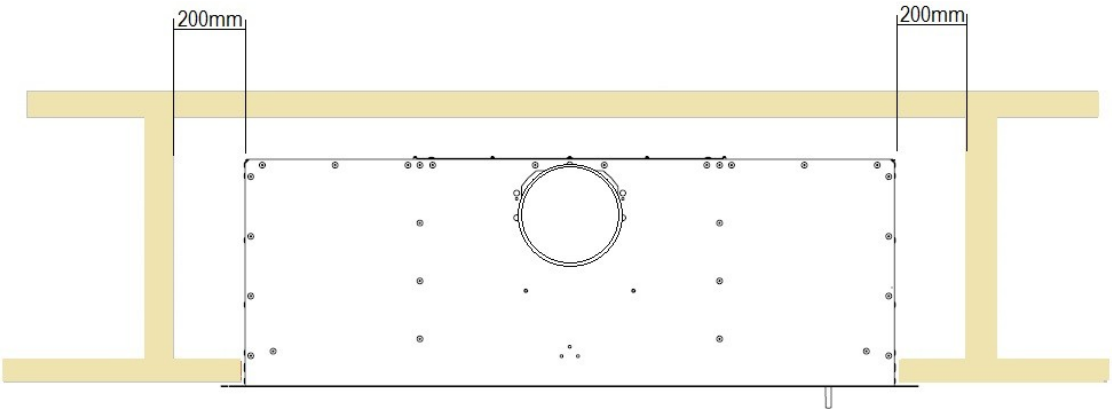

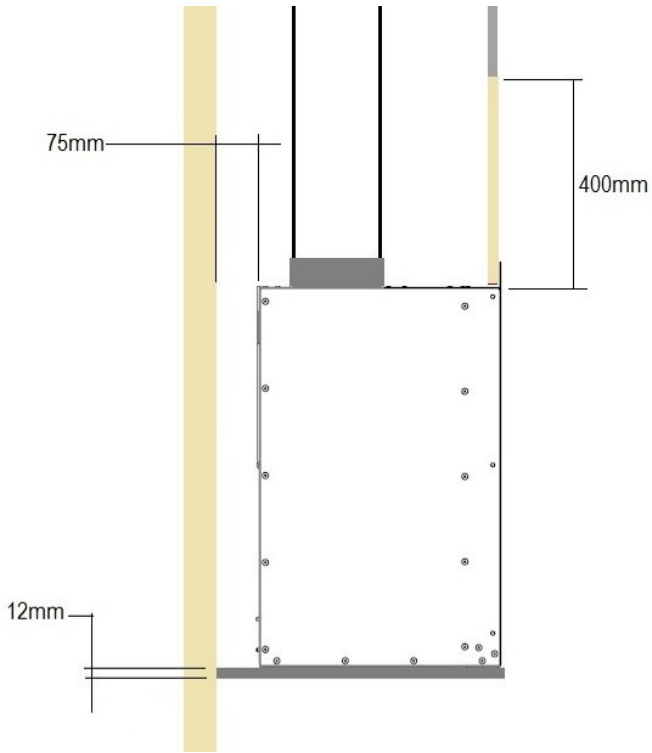

Flue Liner (Optional)

3.8 This appliance can be installed directly onto a flue liner if installed within a masonry fireplace. Under no circumstances should a liner be used in any other type of installation. The following diagrams show the step by step process of converting the appliance to top vent and securing the liner to the firebox.

Remove the four screws securing the top baffle plate, one in each corner. Remove this plate.

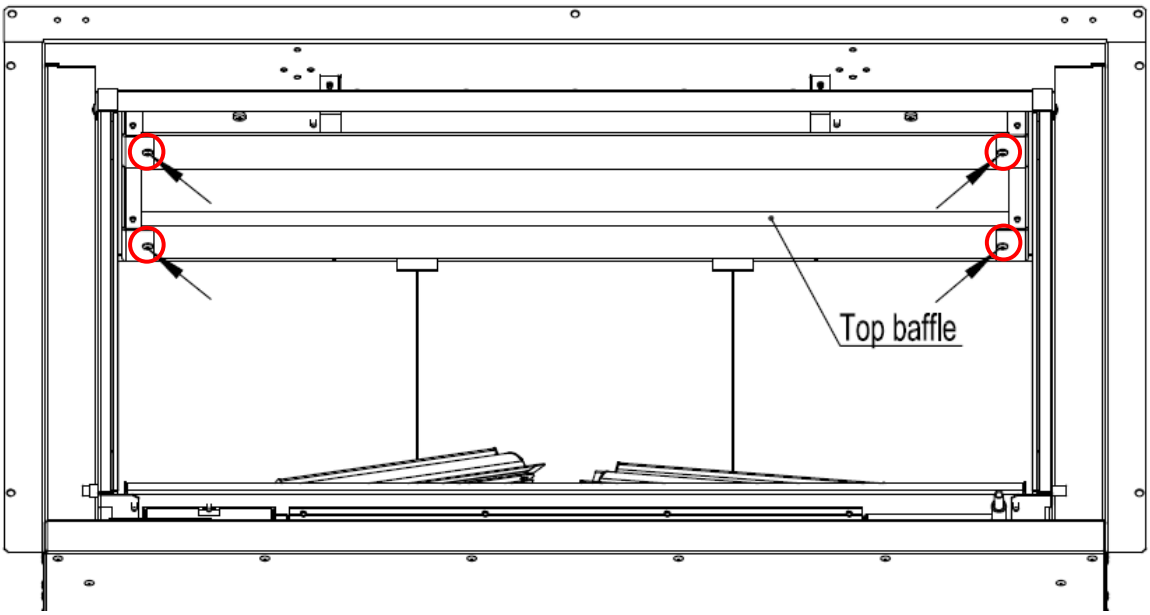

Now remove the access cover by taking out the 10 screws as shown below.

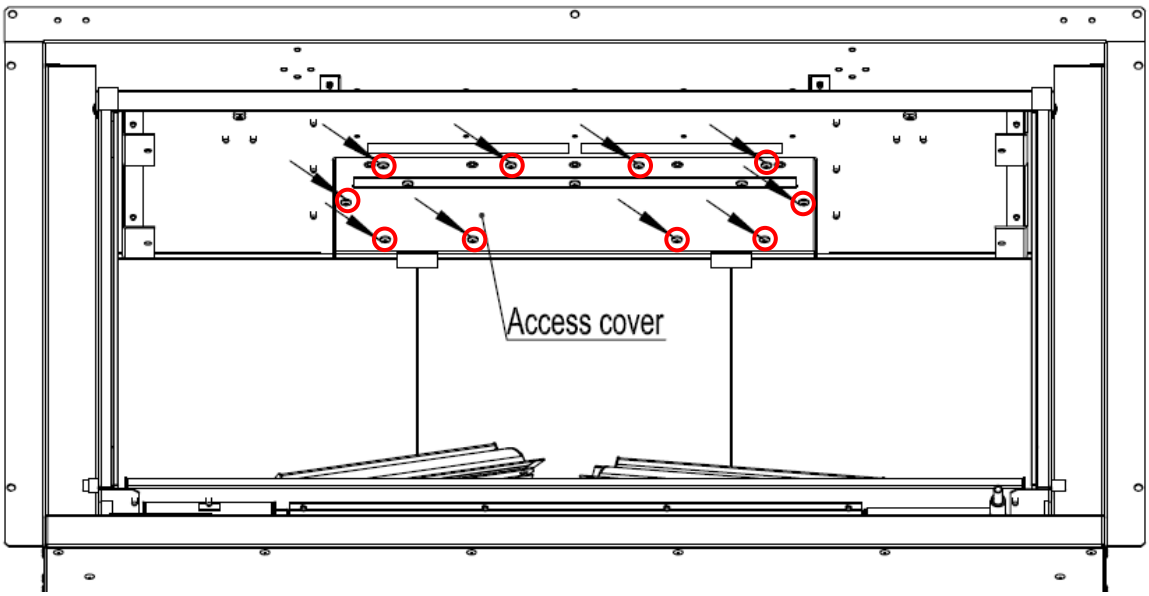

Flue Liner (optional)

Now remove the four screws and take off the top cover-plate.
TWO OF THESE SCREWS WILL BE USED WHEN INSTALLING EFFICIENCY PLATE

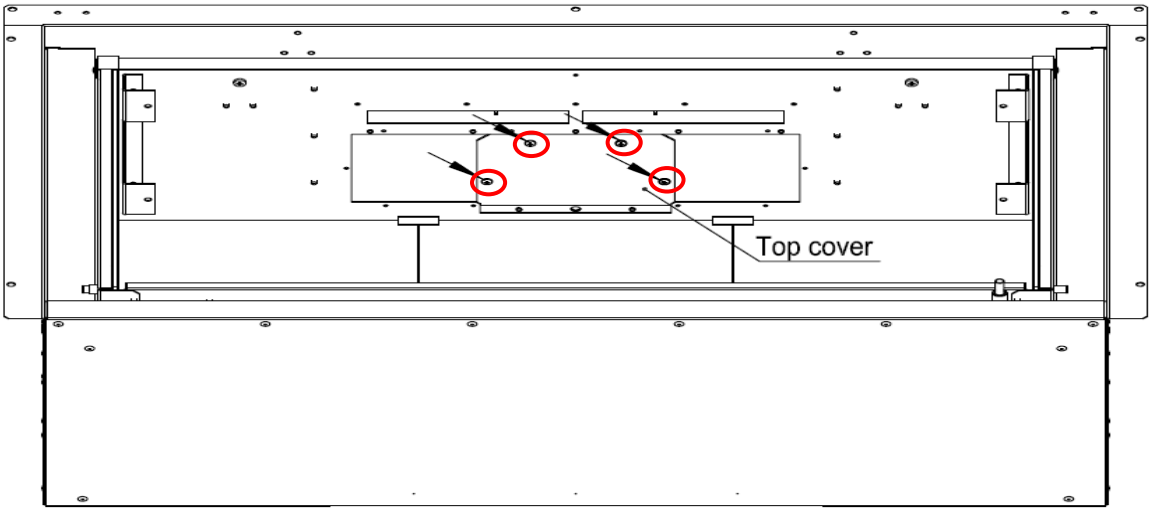

Next, fit the flue closure plate with the 3 screws provided.
NOTE THIS PART CAN **ALSO** BE FITTED FROM THE **INSIDE** OF THE APPLIANCE.THEN THE LOWER HOLE WILL BE USED.

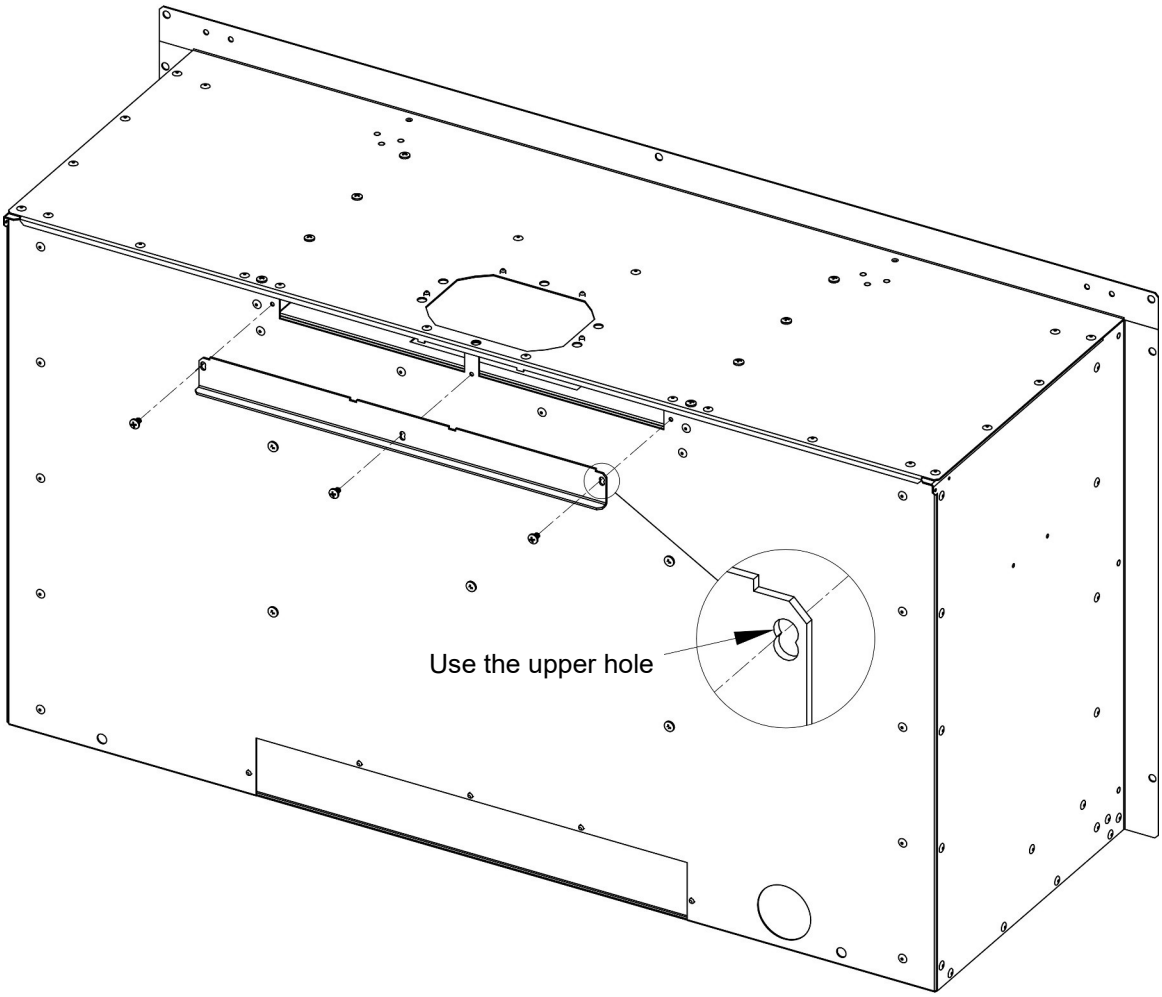

Flue Liner (optional)

The flue spigot should first be fitted to the base of the 5” flexible liner, then from inside the appliance, using the grab handle within the spigot, pull the liner downwards and locate the studs into the correct position. Note that by rotating the spigot through 180° the centre line can be moved fore and aft by 30mm. This may be required to help clear fireplace lintel etc. An adjustable clamp band is supplied to secure the liner to the spigot.

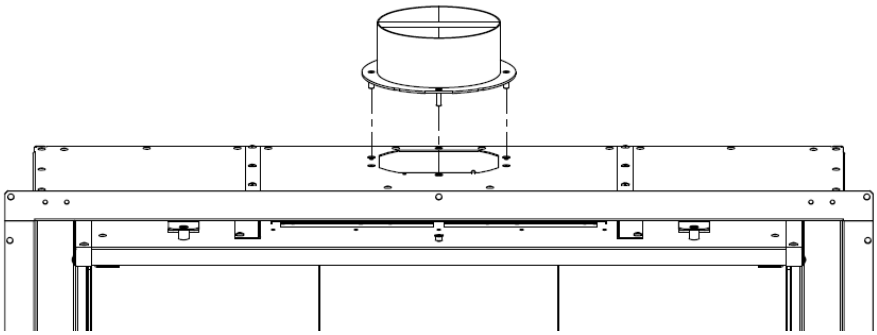

WITH EFFICENCY BAFFLE

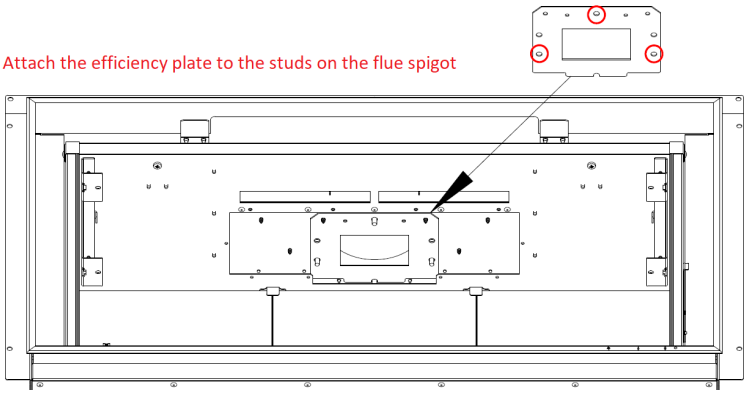

Use 3 nuts and 2 screws to fix the flue spigot and the efficiency plate.
Replace access cover and top baffle.

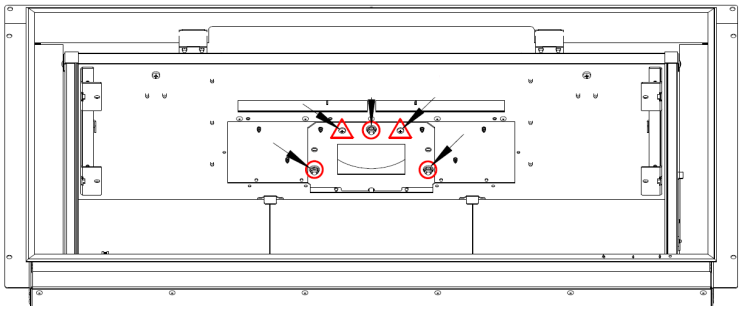

WITHOUT EFFICENCY BAFFLE

Secure with the 3 nuts supplied using the socket driver.

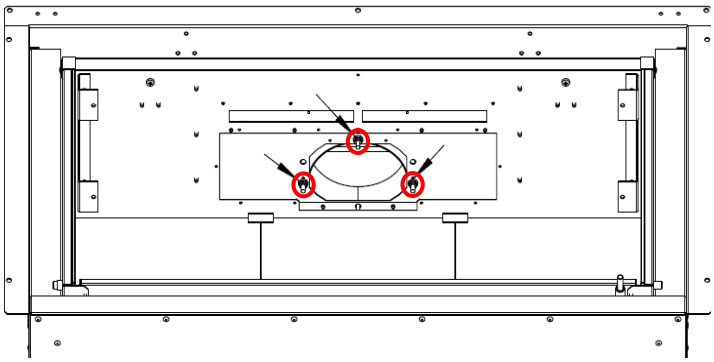

Finally, refit the **Access Cover** and the **Top Baffle.**

Methods of installation

3.9 This appliance has 4 different installation methods:

- **1**. Installation into a **'Hole in the Wall'** with the firebox flange behind the plastered wall.
- **2**. Installation into a **mantel suite** with the firebox flange **behind** the back panel.
- **3**. Installation into a **'Hole in the Wall'** with the firebox flange in front of the plastered wall.
- **4.** Installation into a **mantel suite** with the firebox flange **in front** of the back panel.

When the appliance is installed **in front** of the heatproof board (or slips) on the wall or **in front** of the fireplace back panel then the **800CF Slim Trim** supplied with the appliance should be *removed* and *discarded*. The wider **800CF Wide Trim** will be required - this will affix with magnets.

When the appliance is installed with the flange of the appliance concealed behind the heatproof board (or slips) or fireplace back panel then the 800CF Slim Edge Trim (supplied) will be used. The void behind the flange (to the wall) should be filled using suitable material to allow the fire to be sealed into the fireplace. This void will be dependant on the rebate of the mantel.

The diagrams below show the installation of the appliance in all 4 of these configurations.

800CF 800 SLIM TRIM

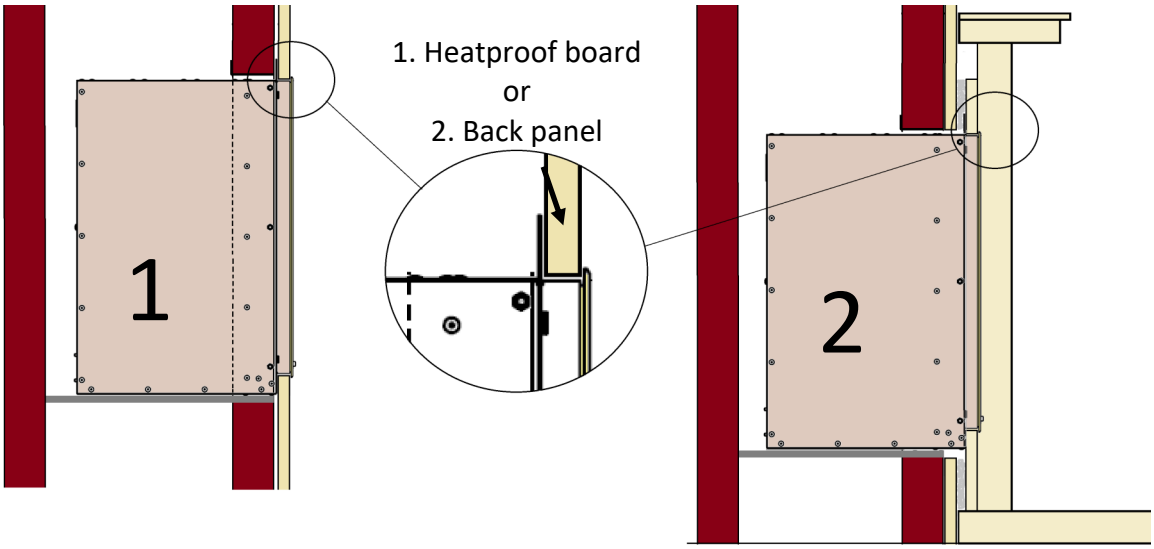

800CF 800 Wide TRIM

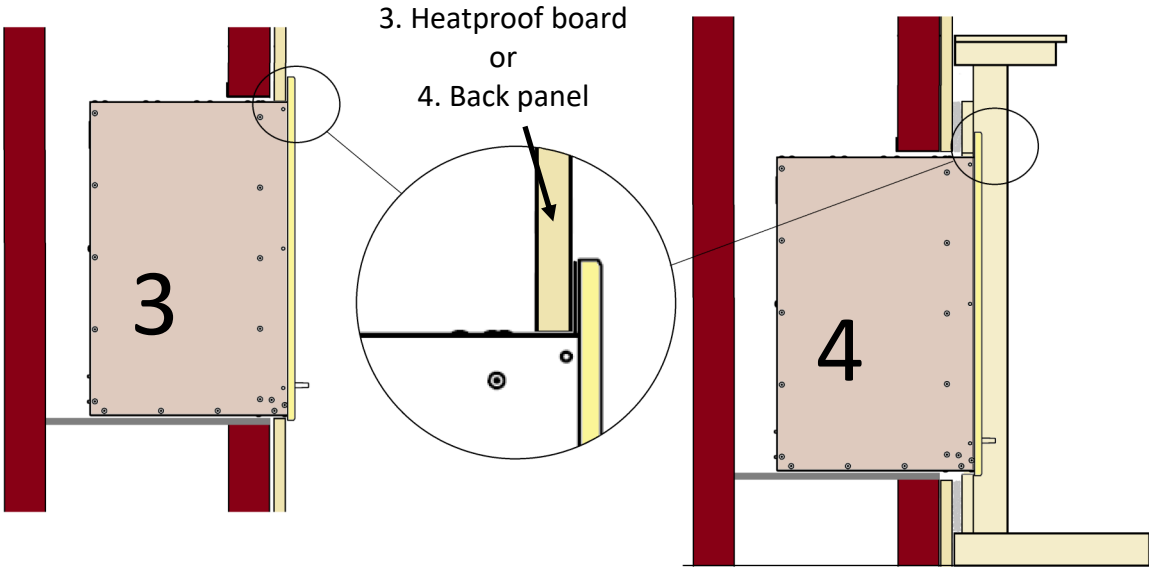

SLIM TRIM INSTALLATION

3.9.1 The **800CF Slim Trim** is supplied with the appliance. Remove this trim and place somewhere that damage cannot occur whilst preparing the installation.

The appliance is already prepared for installation of this trim, with the exception of the two vertical side wings. These wings allow the 800 Slim trim to be screwed to the appliance to hold it securely in the required position. To fit these vertical side wings 6 knockouts must first be removed to allow for screw fixings, 3 on each side. The diagrams below show these knockout positions. The side knockouts allow the fixing of the two side wings.

Fit the two side wings as shown below. Note the fine slits at the top and bottom of the side plates, these slits allow the 800 Slim trim to be fixed in multiple positions depending on the thickness of the wall lining, allowing the trim to be held tightly against the wall surface.

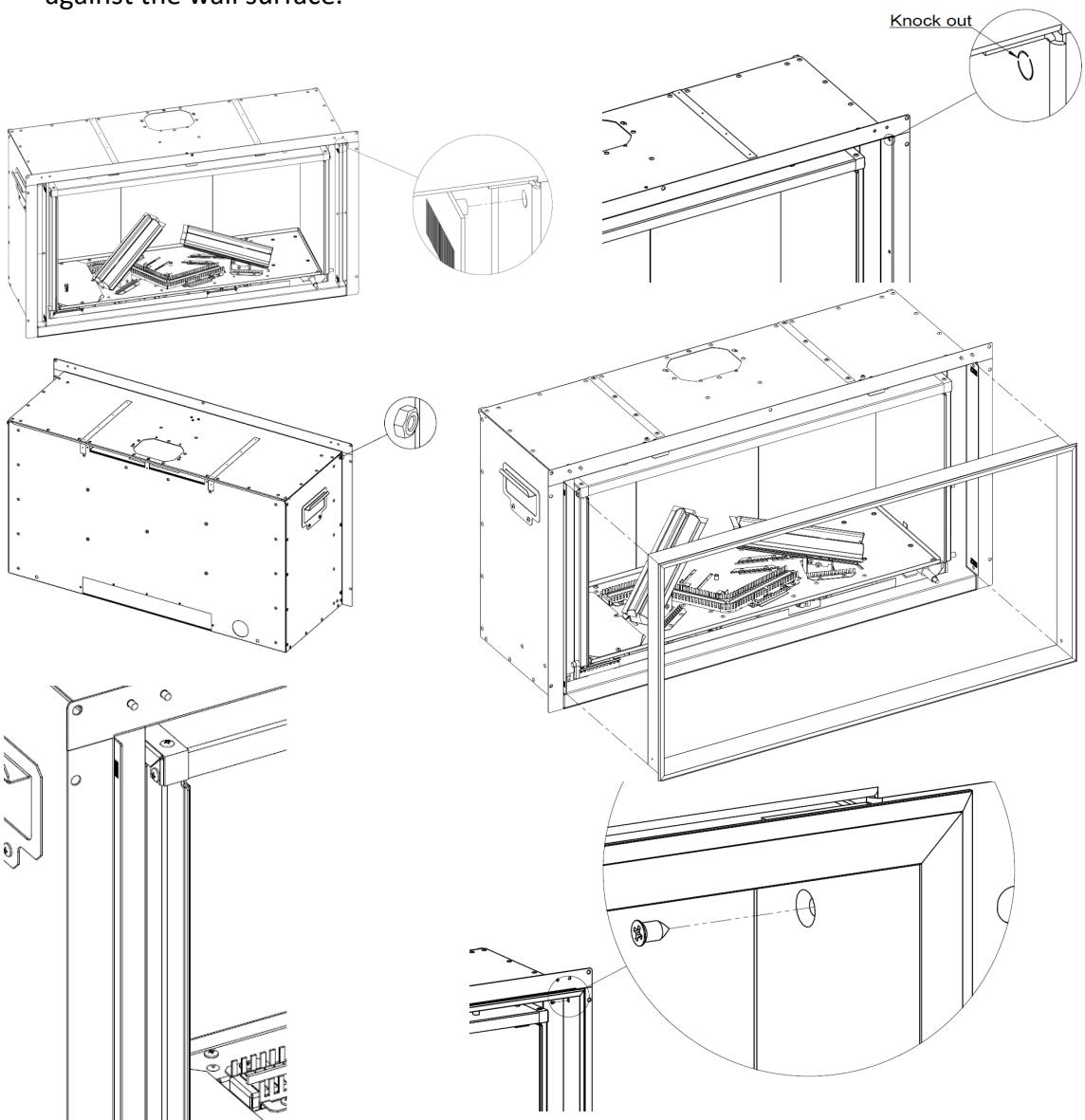

The appliance is now ready to accept the **800 Slim Trim** once the appliance has been installed.

Removal of the Slim trim requires the removal of the inner 4 screws. Then simply ease the trim forwards as it disengages from the upper support brackets.

SLIM TRIM INSTALLATION

3.9.2 When the **800CF Slim Trim** option is selected the following diagram shows the back panel/slip set dimensions which should be used.

Critical Mantel Dimensions

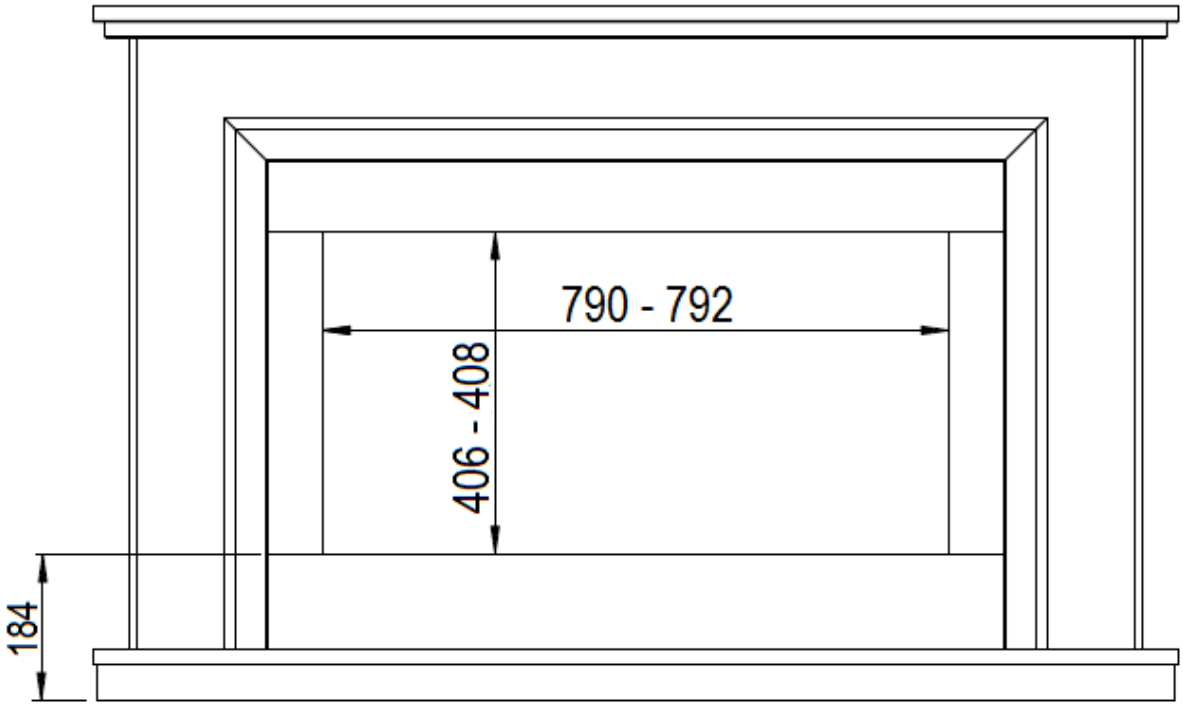

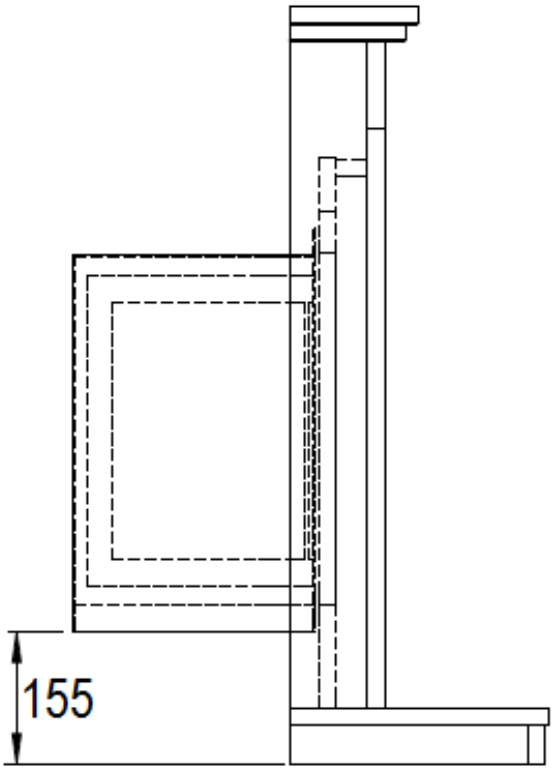

Wide TRIM INSTALLATION

3.9.3 The **800CF Wide Trim** is purchased separately. The Wide trim is supplied with the necessary components to complete the installation.

Remove the Slim trim brackets from the top panel of the firebox. Cover these holes with aluminium tape (supplied) on the **outside** of the firebox.

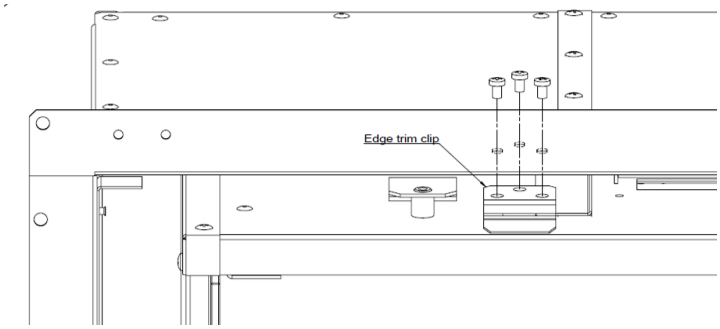

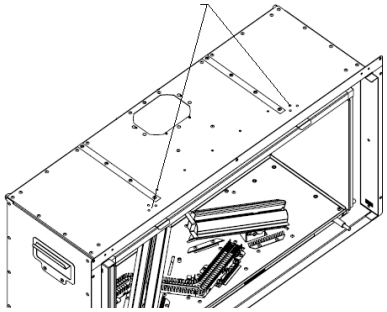

Fit the necessary mounting clips as shown in the diagrams below.

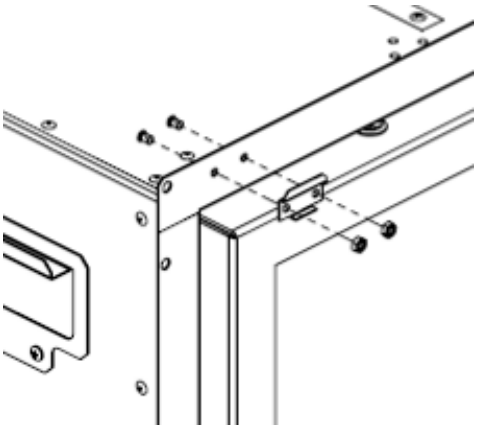

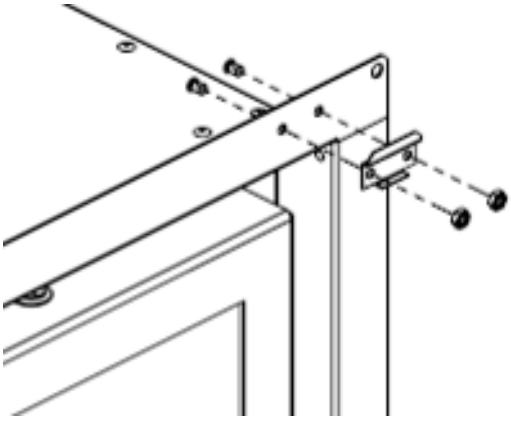

Hang the trim on the brackets as shown.

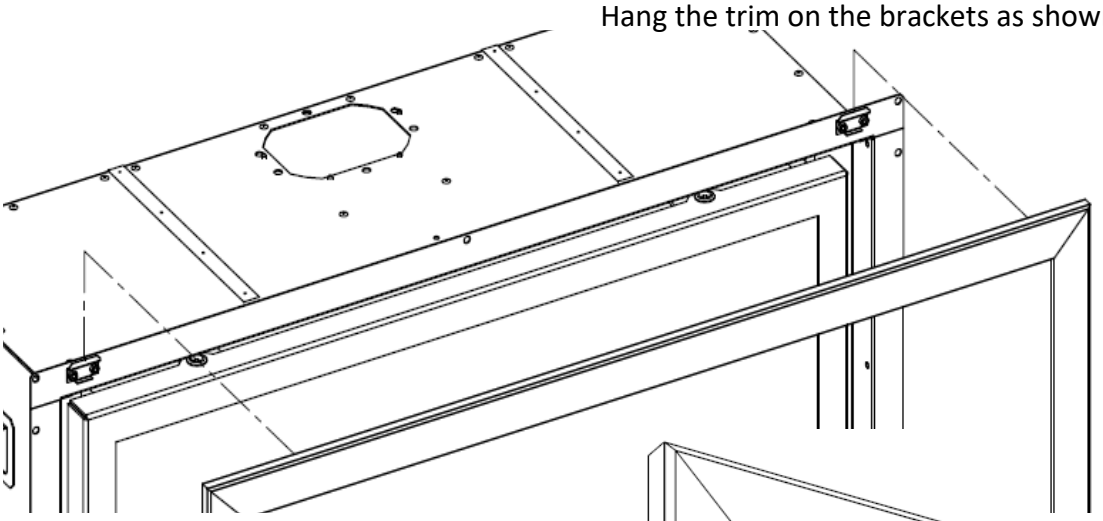

Use the screws provided to secure the trim to the brackets.

Removal of the Wide trim requires the removal of these 2 screws. Then simply lift the trim off the support brackets.

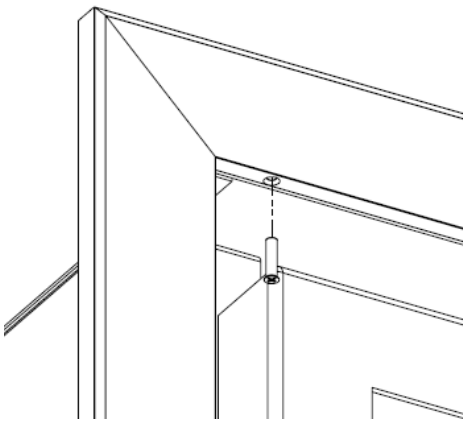

Wide TRIM INSTALLATION

3.9.4 When the **800CF Wide Trim** option is selected the following diagram shows the back panel/slip set dimensions which should be used.

Critical Mantel Dimensions

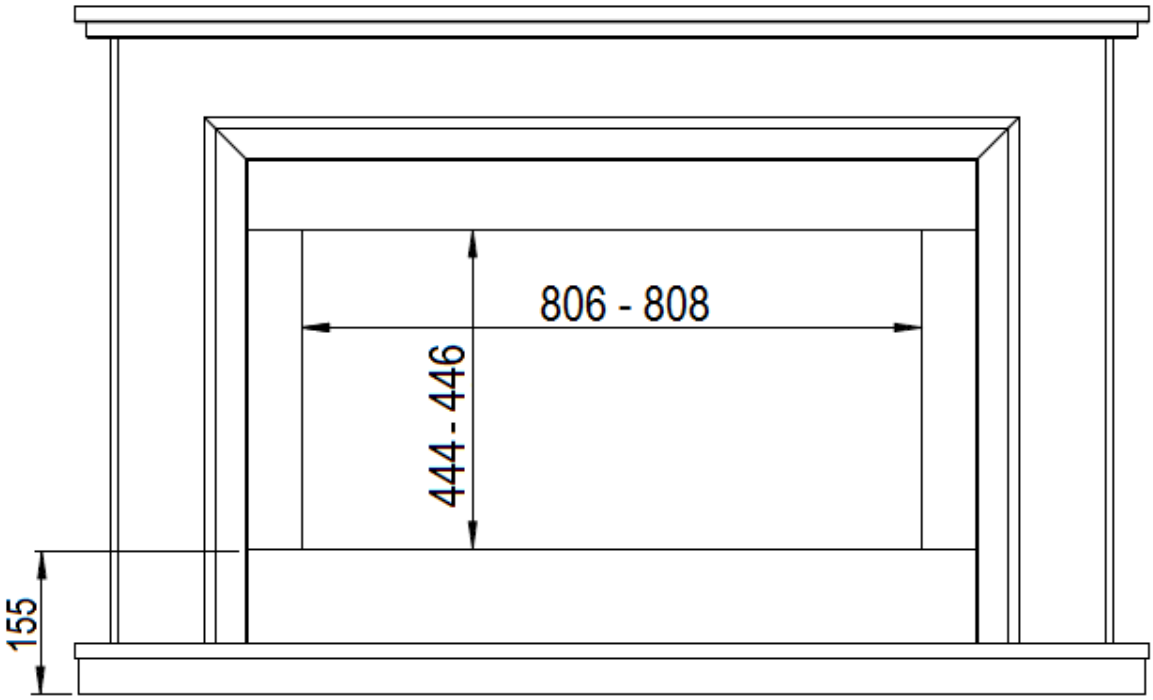

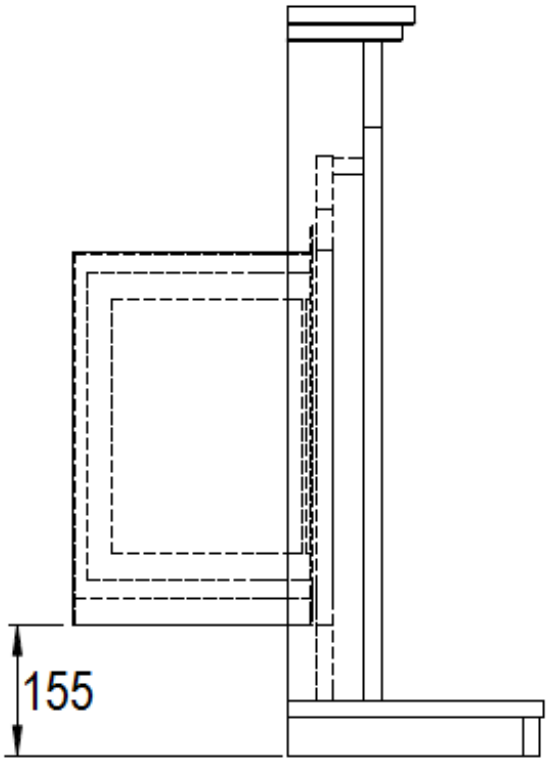

Fixing the appliance

4.0 Fixing the Appliance - Cable Fixing System.

The appliance can be installed using the wire fixing kit. This type of fixing is shown in the following picture. The fitting system comprises four (4) eyebolts, two (2) fixing cables, two (2) screwed nipples and two (2) adjuster fittings.

This installation requires that the burner tray is removed from the firebox. Remove the screws securing the burner tray to the firebox (for details see page 43-45) and set the tray aside during the firebox installation.

Simply drill and fit the eyebolts then thread the fixing cables through the two small holes at the top/rear of the appliance, pass each cable through the two holes as shown—this will secure the cable. Thread the cable through the eyebolts and back into the appliance. When the appliance is in its installed position, pull the cables tight and slide the adjusters to the back of the fire—ensuring the back-nut on the adjuster has been run as far up the thread as possible to the hexagon shoulder. Keeping the cable tight, fit the screwed nipple to the cable and secure. Turn the back-nut on the adjuster fixing and the cable will be tensioned until the appliance is securely fixed.

The foam seal which is supplied with the appliance should be affixed to the rear face of the flange.

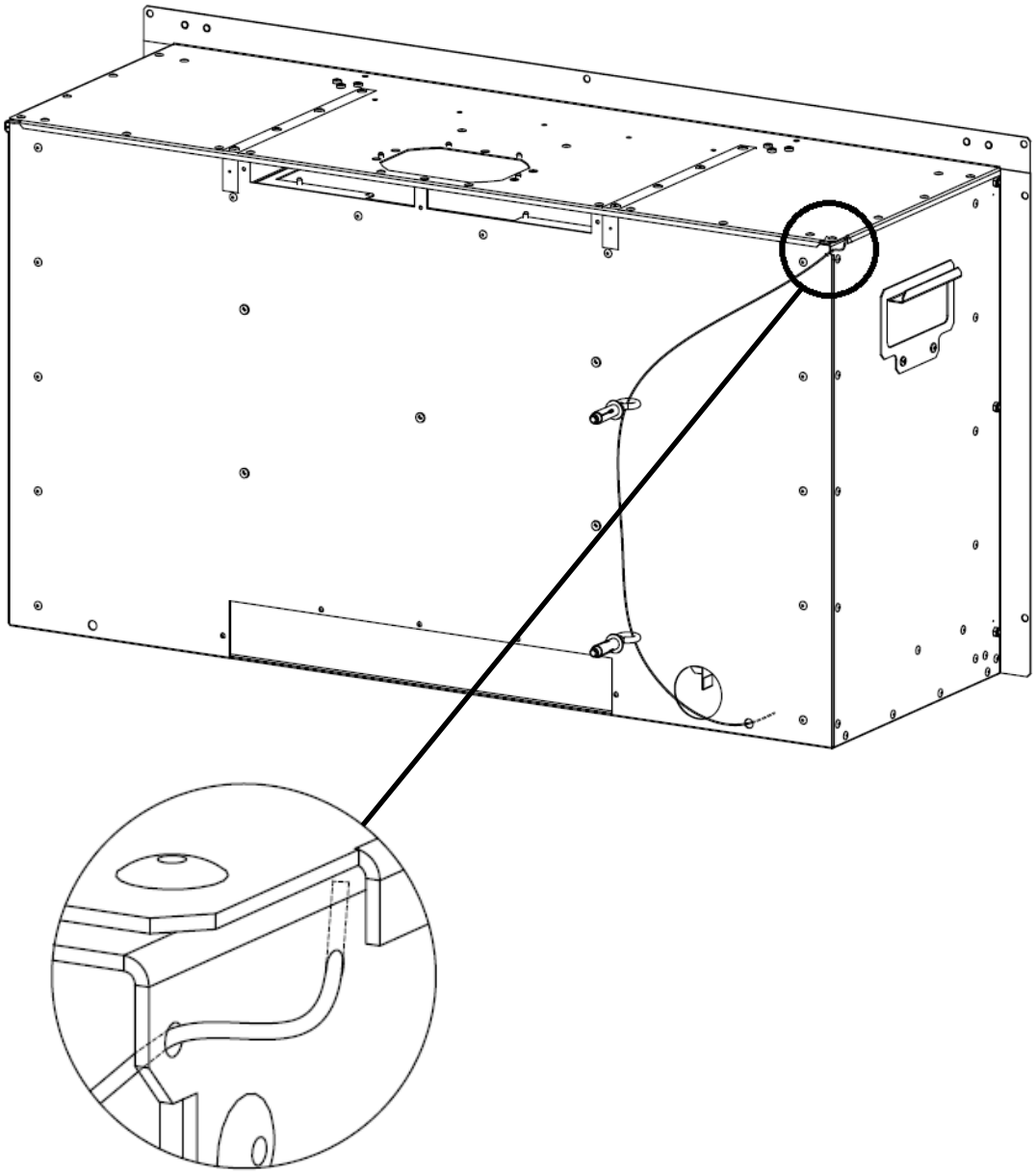

Fixing the appliance

4.1 Fixing the Appliance - Screw Fixing

The appliance can be installed using the screw fixings supplied. See the diagrams below.

The foam seal which is supplied with the appliance should be affixed to the rear face of the flange.

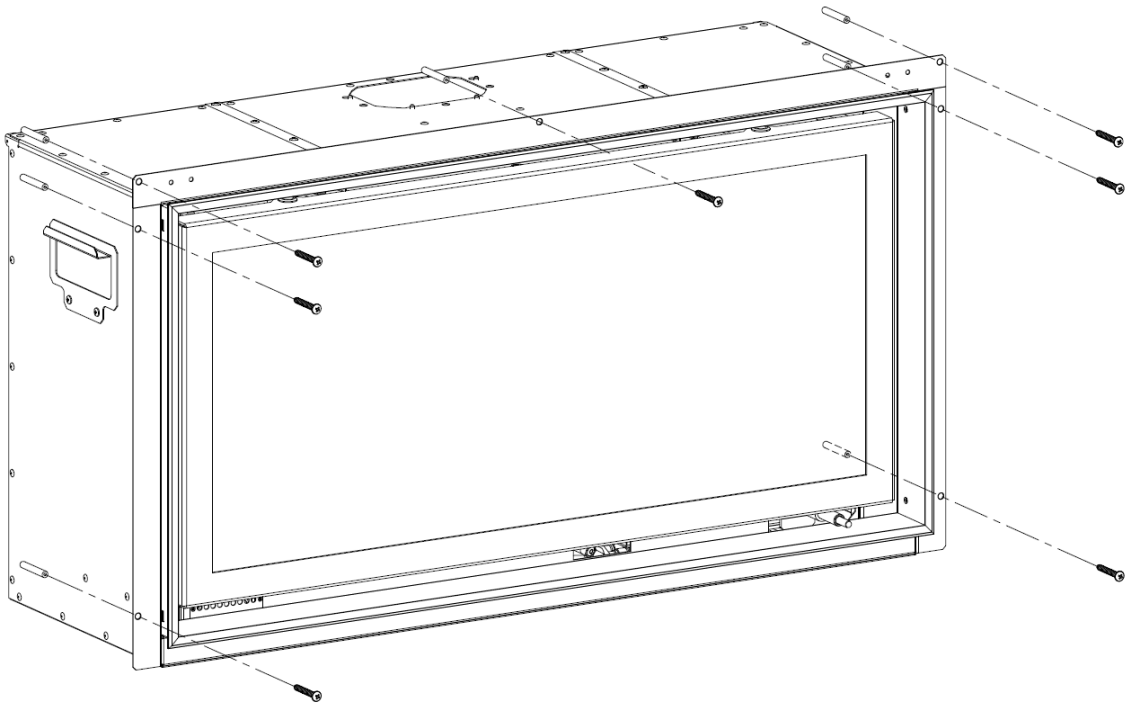

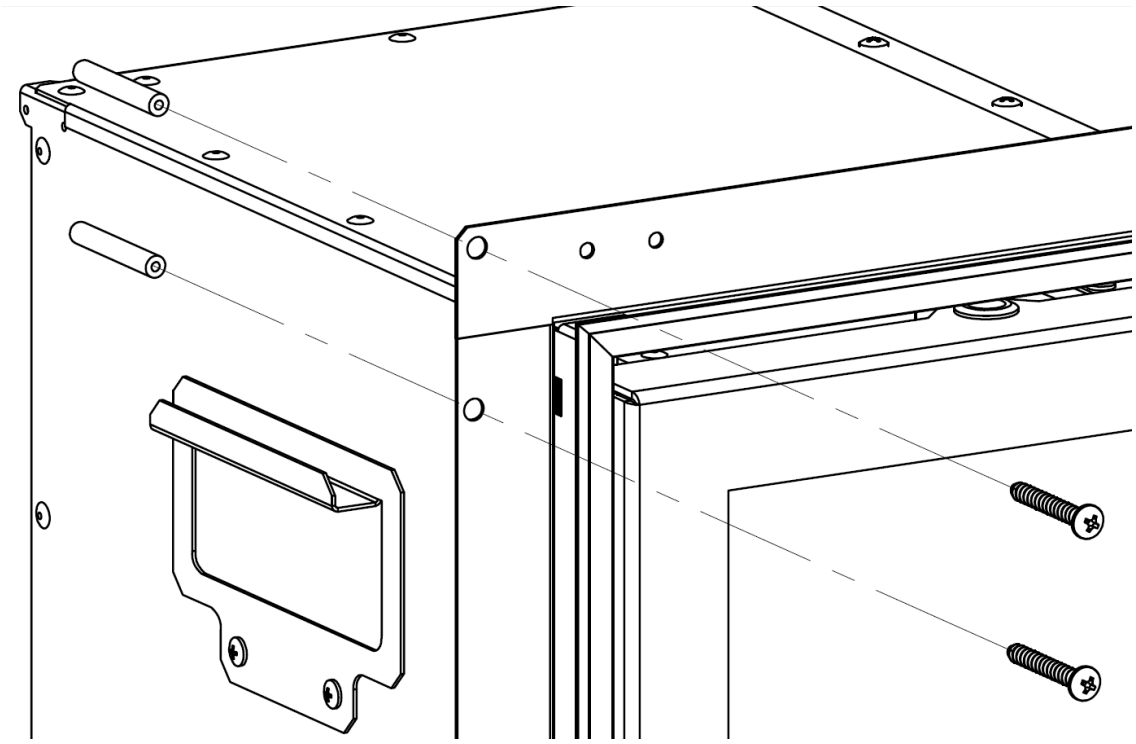

Connecting
To gas supply

4.2 Connecting the Appliance to the Gas Supply

The gas supply should be connected to the appliance by a concealed fitting from the rear. In all installation conditions the gas connection should be provided using 8mm (O/D) copper tubing. **No soldered joints** should be used with the firebox of the appliance. The blind grommet which is supplied in the standard fitting pack **MUST** be used to close up the knock out hole—simply cut a small cross with a sharp knife in the centre of the grommet—this will then seal around the gas pipe to provide a tight seal. **Under no circumstances** should this gas entry hole be **left open** and **unsealed** as this can result in **flame reversal** and can cause **damage** to the appliance. **Should this occur the warranty to this appliance will be rendered void.**

Before connecting the gas supply to the appliance the supply should be purged to ensure no debris can enter the appliance and a gas soundness test should be performed to ensure that the existing pipe work in the property is sound.

The following diagrams show the access to the inlet gas pipe where the isolation valve will be fitted.

If the burner tray needs to be removed, see full details on pages 43-45.

The gas connection should be made to the appliance by the 8mm restrictor isolation valve supplied with the appliance. This restrictor elbow is supplied loose and should be fitted as per the label on the instruction packet.

Test the operating pressure of the appliance by attaching a pressure gauge to the test point of the appliance. This connection should take place when the appliance is OFF. Ensure that gas is turned on at the gas meter.

Remove the two screws on the gas access cover plate as shown below.

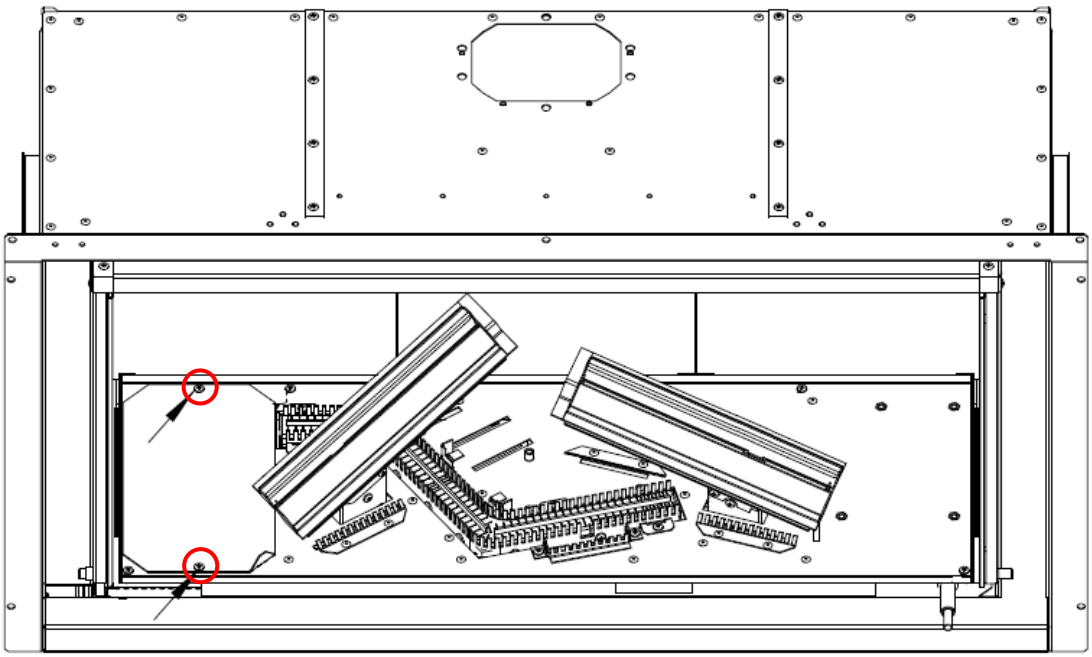

Connecting
To gas supply

Remove the ceramic pad using the finger slot provided.

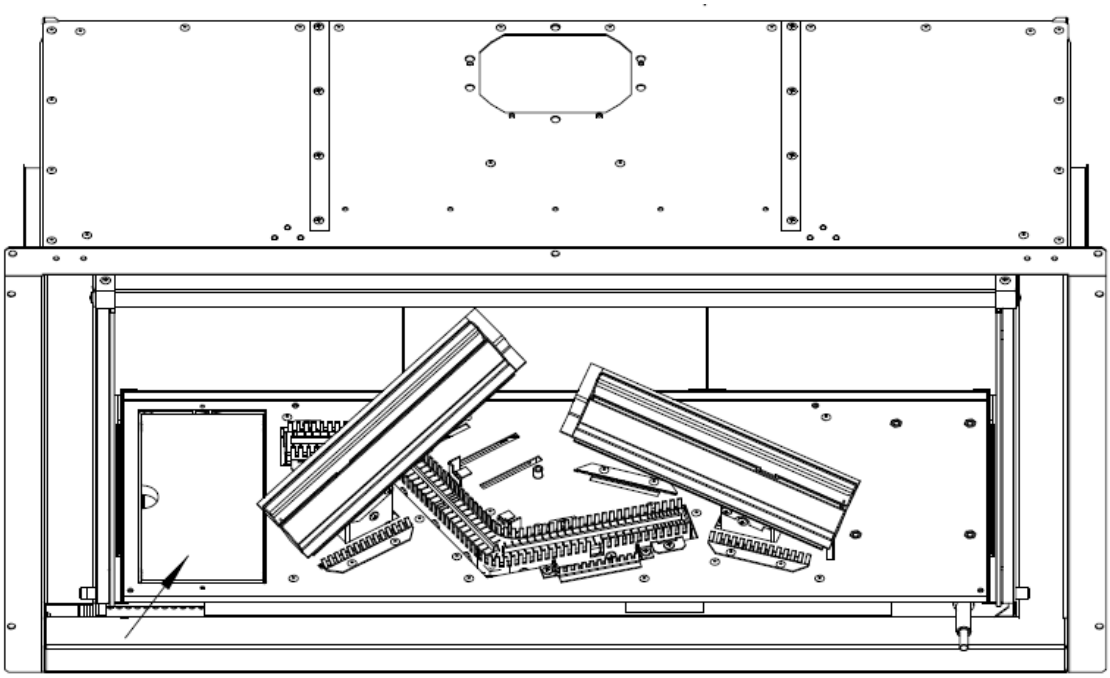

Remove the heat shield plate.

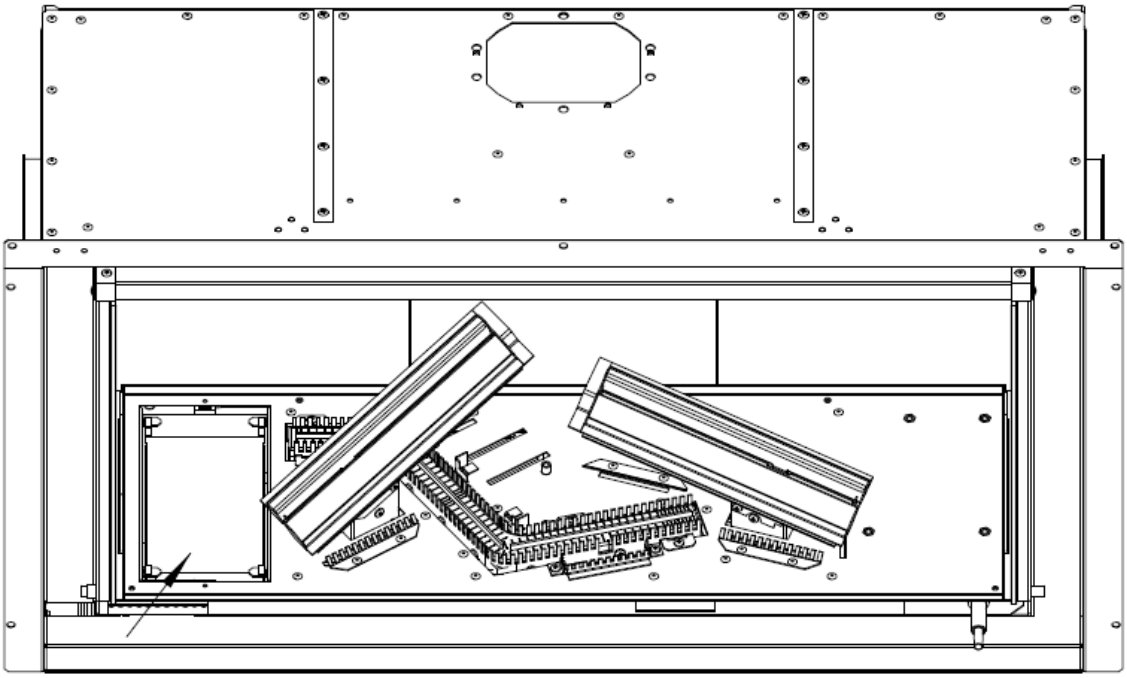

Connecting
To gas supply

Disconnect the HT Lead from the electrode on the pilot. Only if tray is to be removed for cable fixing.

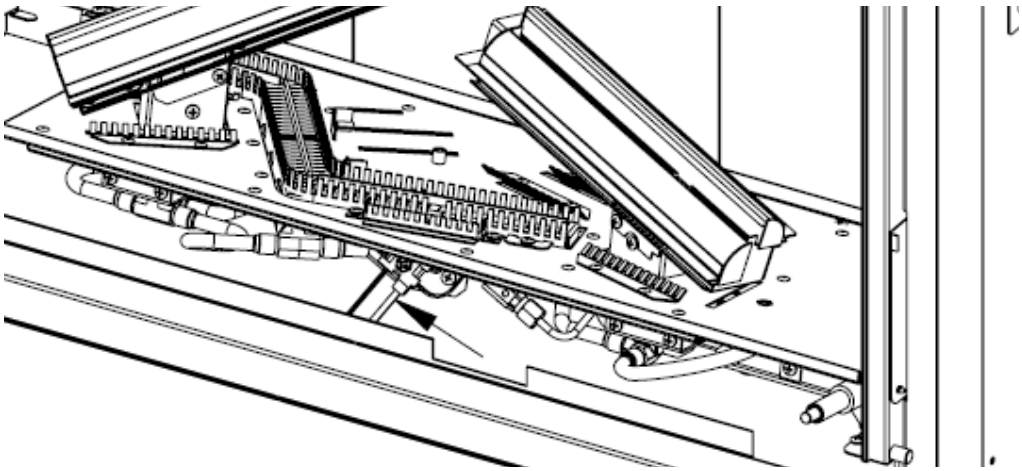

Disconnect the black switch harness plug/socket. Only if tray is to be removed for cable fixing.

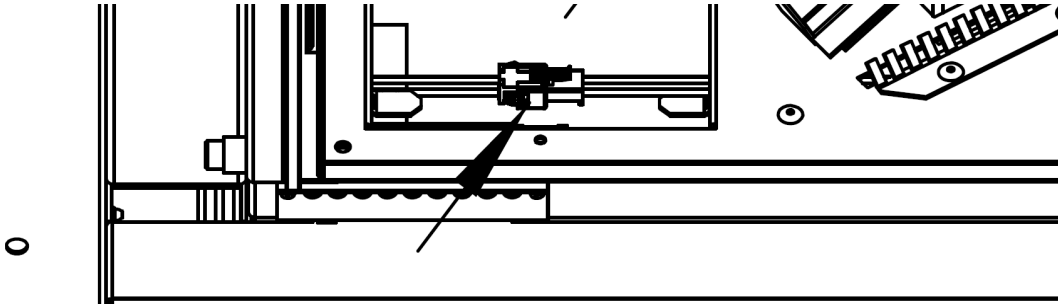

Fit isolation valve to the inlet pipe as shown below.

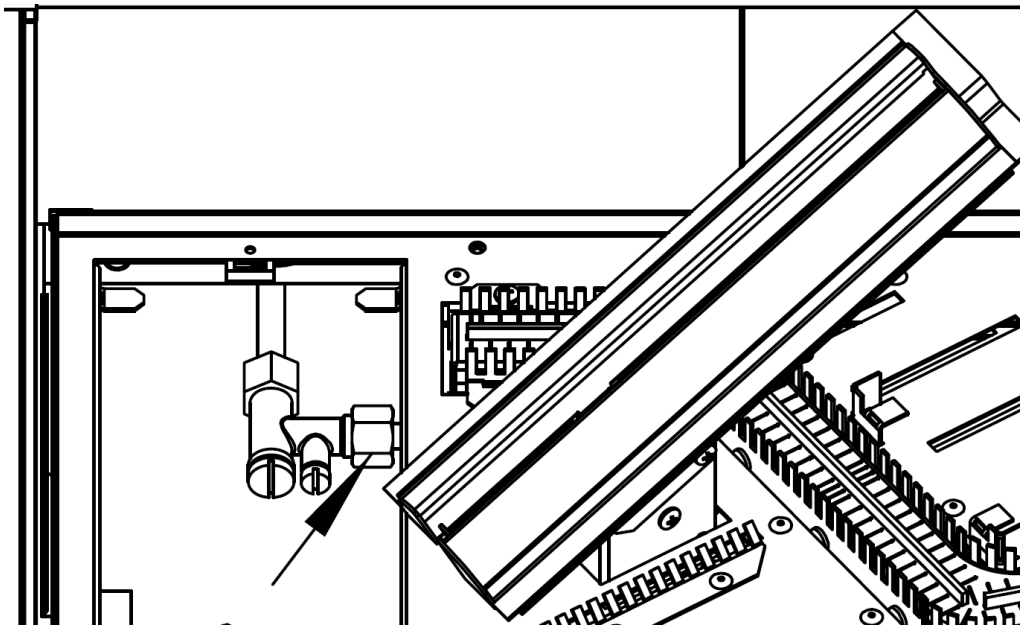

LOG SETUP

4.3 The following instructions detail how the ceramic fuel bed and loose components are to be installed onto the appliance. Great care should be taken when handling these ceramic parts as they are fragile and can easily be broken. Do not force any component into position, if it does not fit easily then you are not fitting the part correctly. These instructions can also be followed to remove or reinstall the fuel bed after cleaning. This is a procedure that can be undertaken by the customer as required and the frequency will be depend upon use.

See page 6 for glass door removal and installation.

The fuel bed setup involves the installation of volcanic rock, ceramic bark, ember wire and a boxed set of ceramic decorative logs. These components will have been installed by your gas engineer at the point of installation, however it is permitted for the end user to remove clean and replace these components as necessary. The following installation instructions must be adhered to at all times.

The following diagram is for identification purposes. It is imperative that the logs are placed in the correct position for safety and also to ensure that you obtain optimal performance from your appliance.

IDENTIFY

FUELBED

Place the volcanic rock on top of the centre burner as shown. Ensure a 4-5 mm gap is left between each piece. Then using **half** of the glowing ember wire supplied (Tools & Fittings Pack), ruffle between fingers to make it loose and about 20mm wide then align over the volcanic rock as shown. Ensure no wire is placed within 25mm of the pilot assembly. Retain the other half of the wire for replacement at annual service.

Place Log A in the orientation shown ensuring it fits neatly into the locating features as shown below.

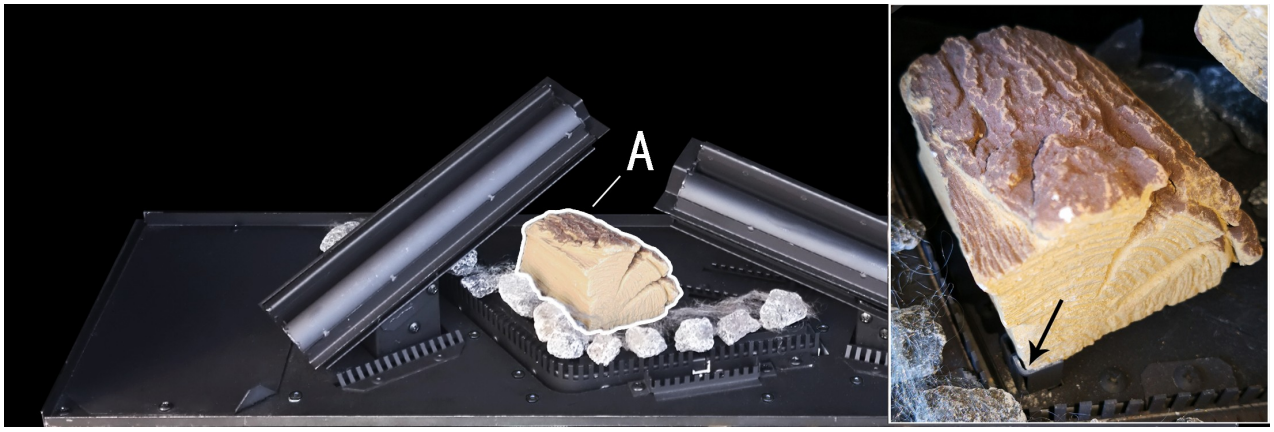

Place Log B onto the left raised burner as shown ensuring it fits securely.

Place Log C onto the right raised burner as shown ensuring it fits securely.

Place Log D in the orientation shown ensuring the branch sits just in front of the air hole in the main log as shown.

Place Log E in the orientation shown. Check that the charcoal area of this log sits just above the air hole as shown in the picture. Align the peak of log E with the pit on the edge of log C

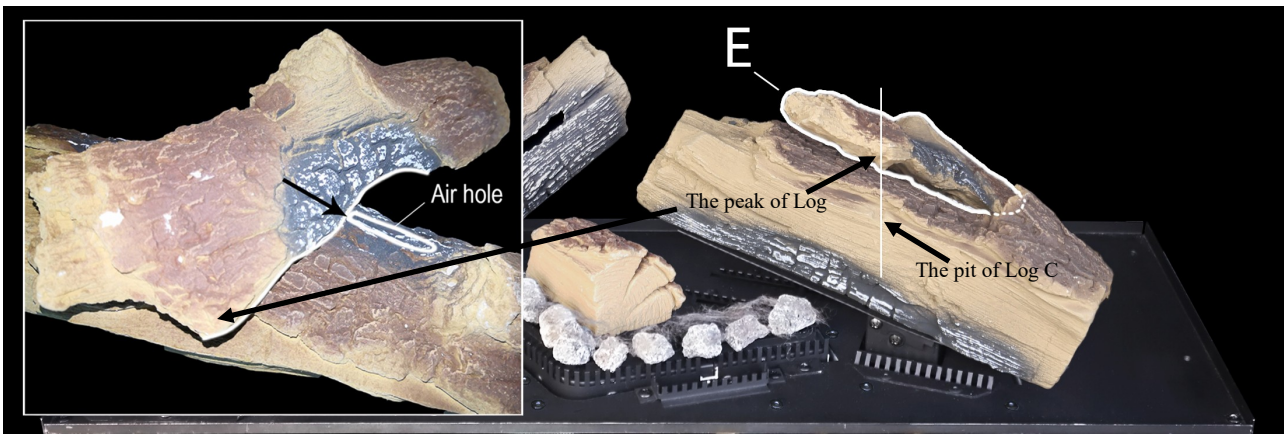

Place Log F onto the burner bed in front of the centre burner as shown.

bark

Place the bark around the fuel bed as shown. Ensure that no bark can interfere with the pilot operation.

Place Log G as shown in the picture.

Place Log H onto the burner bed as shown.

Place Log I onto the burner bed as shown.

LIGHTING THE FIRE

4.4 Operating Instructions

This appliance has a concealed slide control knob. It is discreetly concealed in the space between the decorative trim and the glass door frame on the lower right hand side. Simply press the knob and it will protrude from its current position to enable operation.

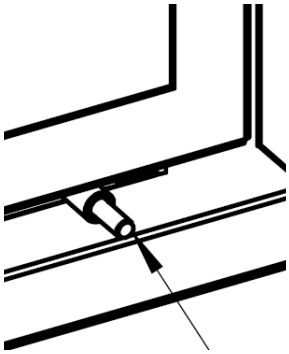

The knob will slide from left to right, this movement controls all functionality of the appliance, from ignition, flame control and turning the appliance off. When the desired operation is complete, simply press the knob inwards and it will return to its stowed position.

Slide the control knob to the left to the ignition symbol. After a few seconds the pilot light should light.

If the pilot light does not light, release the control knob and wait for 3 minutes before reattempting. If the pilot does not light after 3 attempts, check the battery—see page 6. If the battery is new and the pilot still fails to light, contact a gas safe engineer.

Once the pilot is lit, keep the lever pushed to the left for up to 10 seconds then release. The pilot should stay lit and the central and front log burners will now light.
The appliance is now running at the LOW setting.

Slide the knob slowly to the right to turn the rear log burners on. The appliance is now running at the HIGH setting.

To turn the fire off, slide the lever all the way to the right to the OFF symbol.

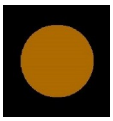

Should the spark generator fail to provide a spark at the electrode it may be that a small amount of soot has fallen from the fuel bed onto the pilot assembly, causing a short circuit. If this is the case, ensuring the appliance is off and cold, this area can be cleaned with the thin nozzle from a vacuum cleaner. See page 6 for details on glass removal to access this area.

Alternatively check the battery is in good condition—see page 6 for details.

Check for spillage

4.5 Spillage monitoring System (ODS Pilot)

This appliance is fitted with an atmospheric sensing system in the form of an oxygen sensing pilot burner. This is designed to shut the fire off in the event of products being spilled into the room where the fire is being operated. It is important to note that this spillage monitoring device should not be disabled or be adjusted by the installer. If the spillage monitoring device (O.D.S pilot) is replaced it must only be exchanged with a suitable component which is supplied by Be Modern Ltd.

Check the clearance of combustion products

SPILLAGE TEST: To check for satisfactory clearance of products of combustion, close all doors and windows and leave the appliance burning on HIGH for five minutes. Using a smoke match holder, insert the smoke match about 50mm into the gap a the top centre of the fire. Traverse the match across the length of the draft diverter. All the smoke must be drawn into the flue. If spillage occurs allow a further 5 minutes and repeat the test.

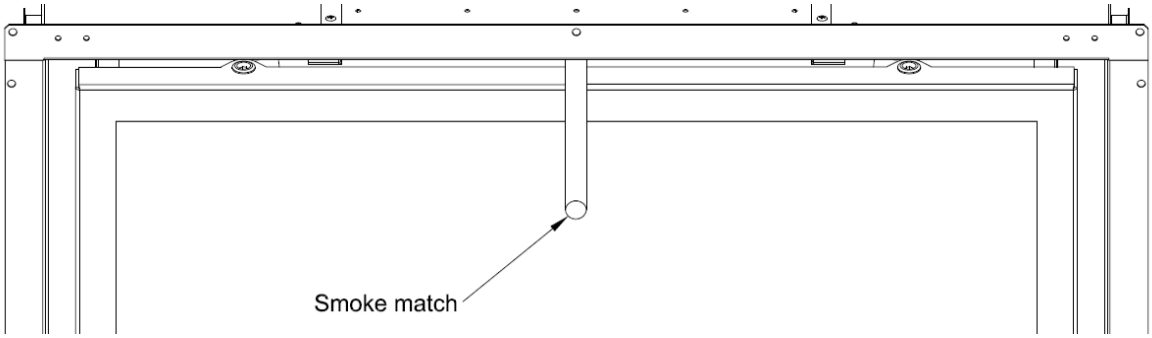

If spillage still occurs then the restrictor at the top of the appliance can be removed to ease flow of combustion products. Remove the top baffle (see page 20) then remove the 3 screws dismantling the restrictor. (Wait for 10 minutes perform then perform a retest).

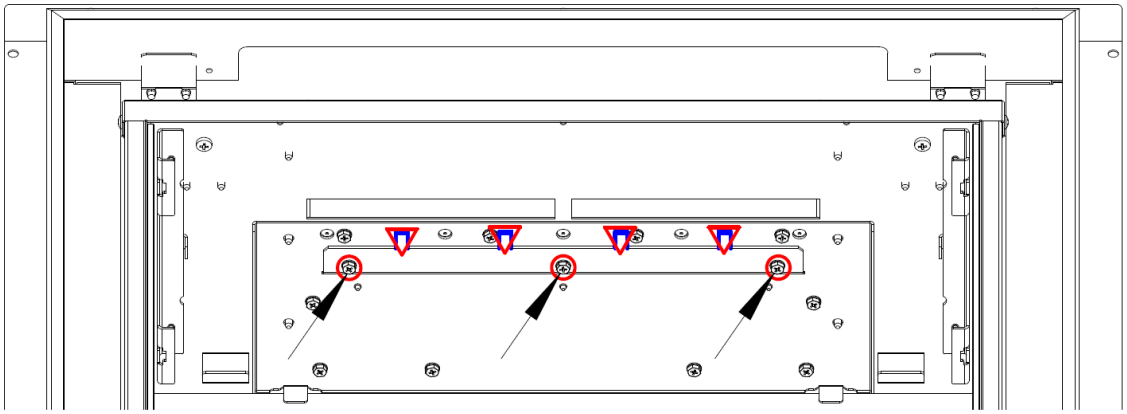

When the flue draft is too strong (high pull), then change the restrictor position see below.

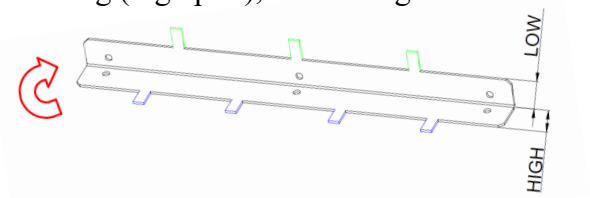

If the appliance still fails it may be necessary to install a 5” flue liner (if not already fitted). If the unit continues to fail this test, turn off the appliance and seek expert advice.

If an extractor fan is situated in the room the spillage test should be repeated with the fan running. If there is a connecting room with an extractor fan the test should be repeated with all the doors to that room open and the extractor fan running.

COMBUSTIBLE SHELF

4.6 Combustible Shelf

This appliance may be fitted below a surround with a combustible shelf providing the following dimensional criteria is met:

There must be a minimum distance of 250mm from the top of the appliance to the underside of the shelf.

The shelf must not project more than 150mm from the mounting surface of the appliance into the room. If the shelf projects more than 150mm then the distance between the top of the appliance and the underside of the shelf must be increased accordingly; for every 10mm of projection above 150mm the distance between the fire and shelf must be increased by 25mm

Shelf Protrusion (X)	Min. Distance (Y) Between Fire and Shelf
150mm	250mm
160mm	275mm
170mm	300mm
180mm	325mm
190mm	350mm
200mm	375mm

Any combustible side wall, for example leg of timber mantel, should be a minimum of 200mm from the appliance.

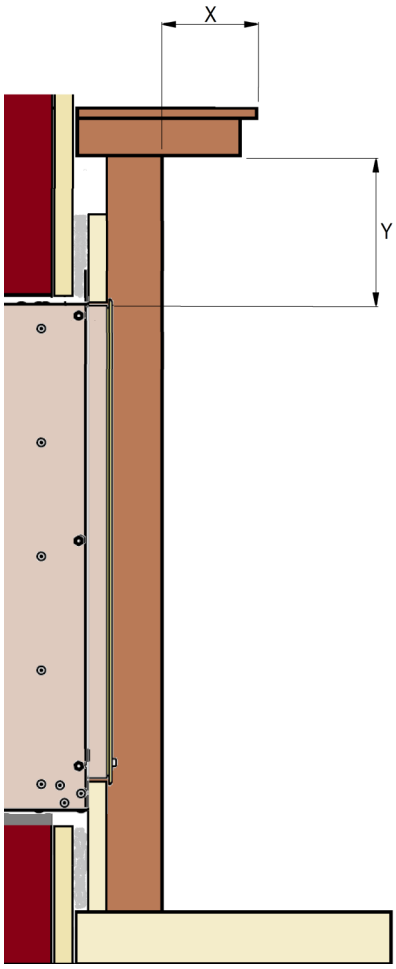

Complete the installation

4.7 INFORM THE CUSTOMER OF THE FOLLOWING TO COMPLETE THE INSTALLATION

Demonstrate the lighting of the appliance and the controls to control the heat settings. Demonstrate how to turn the fire off.

Demonstrate the removal of the trim and how to reinstall correctly.

Discuss the removal and reinstallation of the glass door and the ceramics. Explain how they should be cleaned and make the customer aware of the health and safety warning detailed later in these instructions.
Explain to the customer that the ceramics are fragile and must be treated with great care, explain that the ceramics are not covered by the warranty because of their fragility. Also explain that small hairline cracks will appear in the surface of the ceramics due to heat expansion and contraction—this is perfectly normal.

During the first several hours of use an odour will be experienced—this is normal and is the starch oils and paints used in the manufacturing process. This odour is non toxic and will eventually disappear with use.

Advise the customer that ALL glass fronted gas appliances will leave condensation on the inside face of the glass when first lit—this is perfectly normal and is a result of the water vapour present in the combustion products hitting the cold glass surface. This condensate will disappear over the next minute or so. It is also important to advise the customer that this condensate will carry with it any **impurities in the air** and will therefore, with use, leave a **slight grey condensation mark** on the inside of the glass. We advise that this is cleaned off maybe 2 to 3 times a year, dependant on use.

Advise that no rubbish should be thrown onto the appliance and that the appliance should be cleaned regularly.

Advise the customer that the appliance should be serviced annually by a gas safe engineer to ensure the safety and integrity of the appliance.

Advise the customer that the appliance has a naked flame and therefore it is essential that a suitable fireguard be used for the protection of the elderly, infirm and young children. This fireguard should conform to BS8423 : 2002 (Fireguards or use with Gas Heating Appliances).

These instructions and all supplied installation tools must be handed over to the customer once installation is complete.

Servicing

5.0 Servicing the Appliance.

The following procedures can and should **only** be performed by a **Gas Safe registered installer**.

This appliance should be serviced annually by a **Gas Safe registered installer**.

5.1 Removal of the burner tray.

The removal and replacement of all the gas carrying components will require the removal of the burner tray. The following information details the removal of this tray. Once removed, refer to the relevant section that follows detailing the removal of the specific component (s).

- Turn off the gas supply at the isolation valve on the appliance. Ensure the appliance is cold.
- Remove the glass door. See page 6.
- Remove the fuel effect components - put in a suitable location where they cannot be damaged.
- Disconnect the gas supply from the restrictor elbow.
- Remove the screws securing the burner tray to the firebox
- Disconnect the HT lead and unplug the switch harness.
- Re-assemble the tray in the reverse order.

The following diagrams demonstrate the removal of the tray.

Remove the 2 screws securing the gas inlet access hatch, marked '**A**' and the 4 screws securing the burner tray to the firebox, marked '**B**'

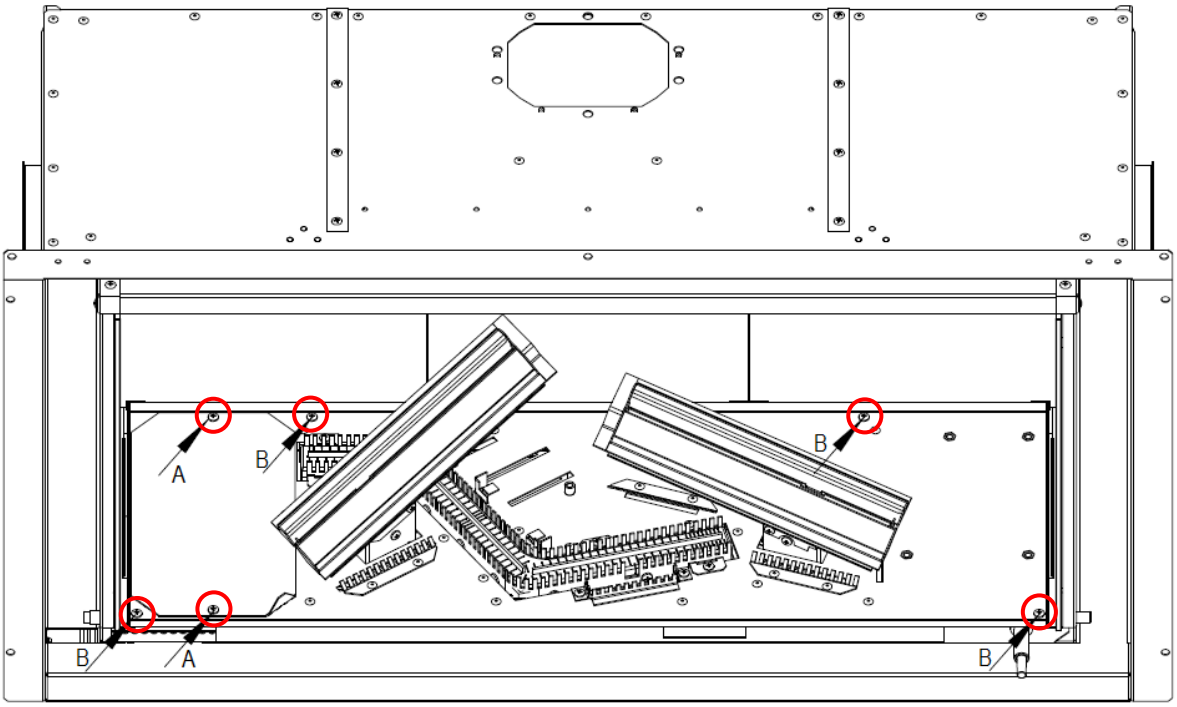

Remove the ceramic pad using the finger slot provided.

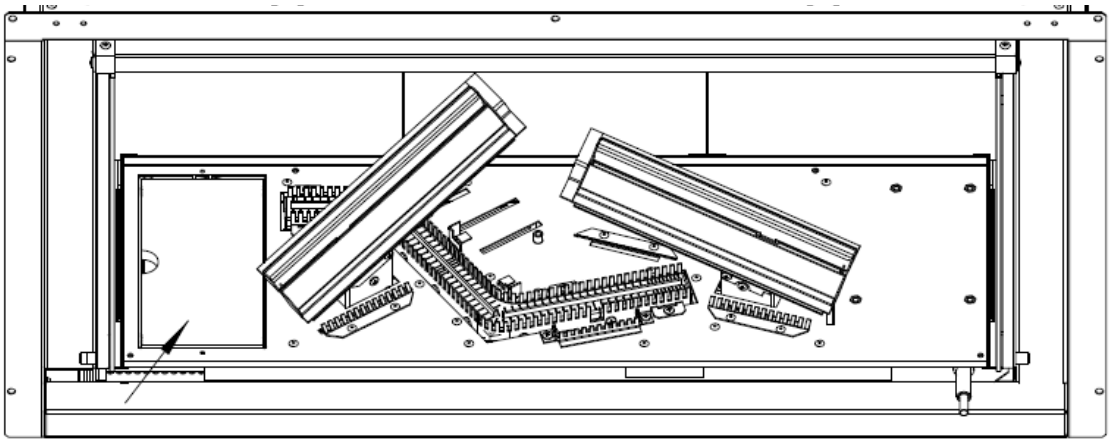

Remove the heat shield plate.

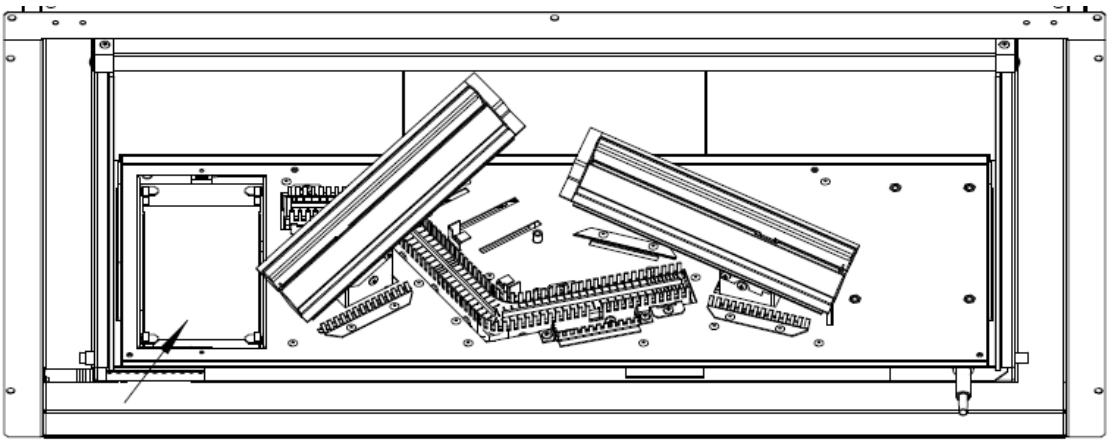

Fit isolation valve to the inlet pipe as shown below.

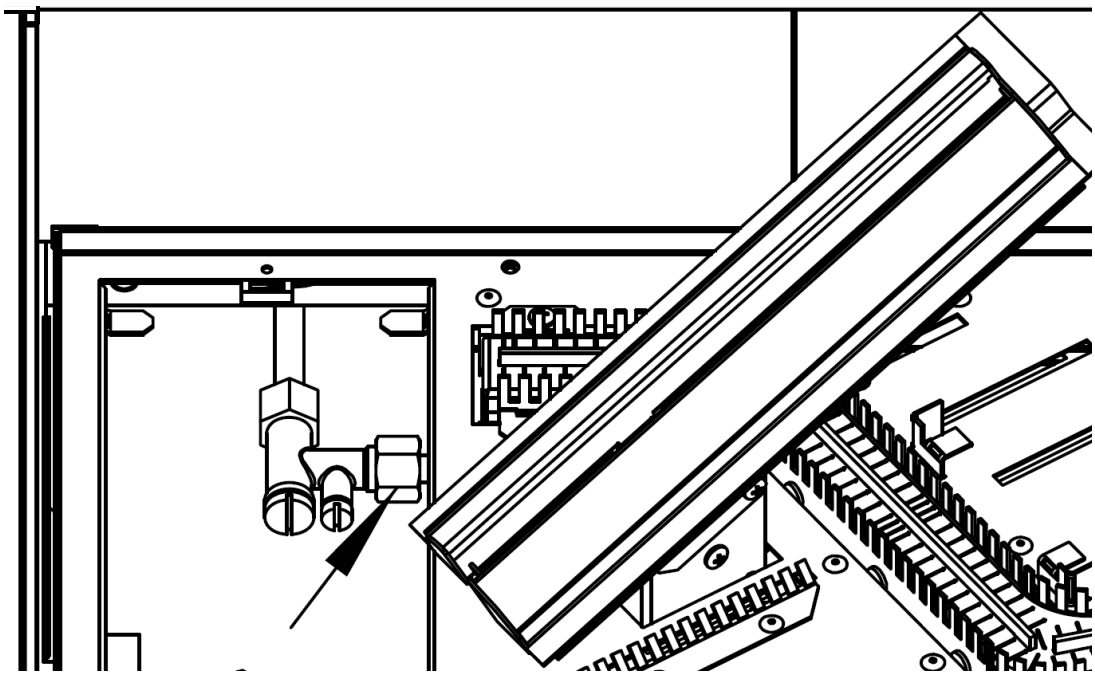

Disconnect the HT Lead from the electrode on the pilot

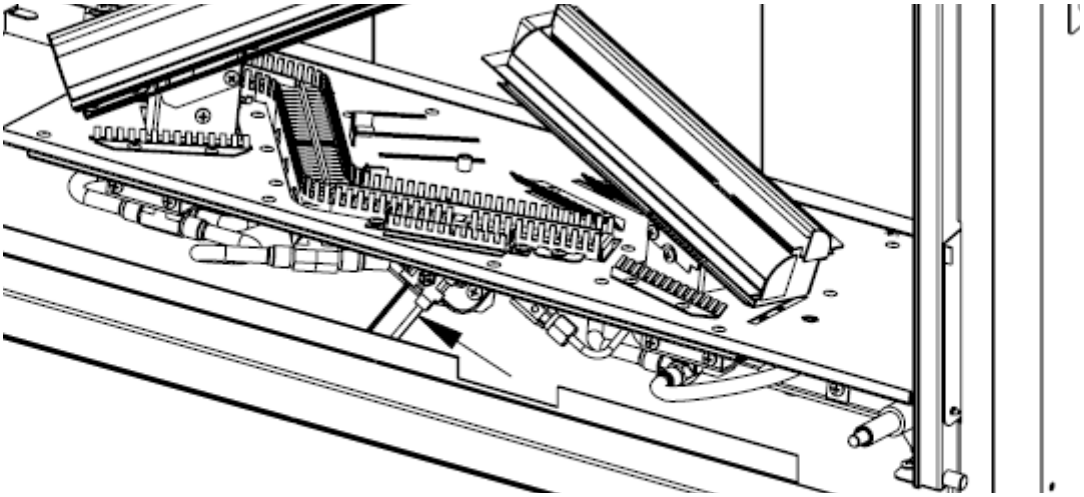

Disconnect the black switch harness plug/socket.

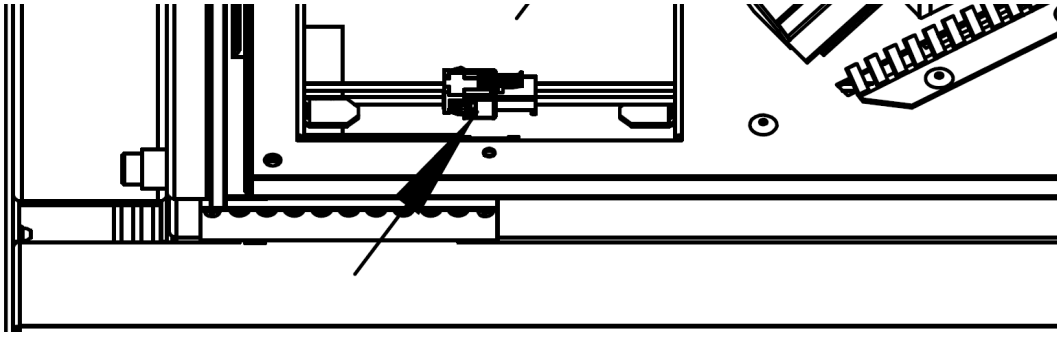

Carefully remove the burner tray from the firebox.

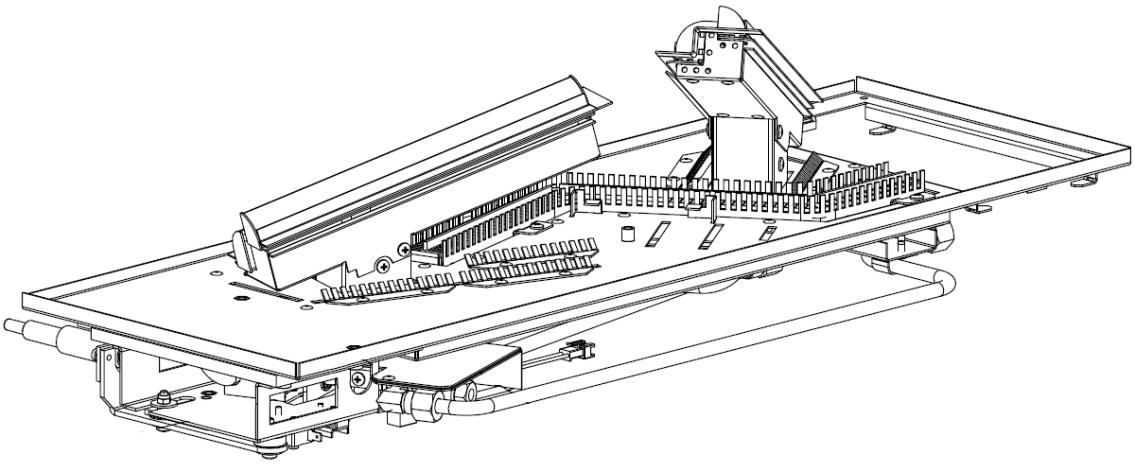

5.2 Remove of Slide Gas Valve.

Remove 1 screw to remove the heat shield.

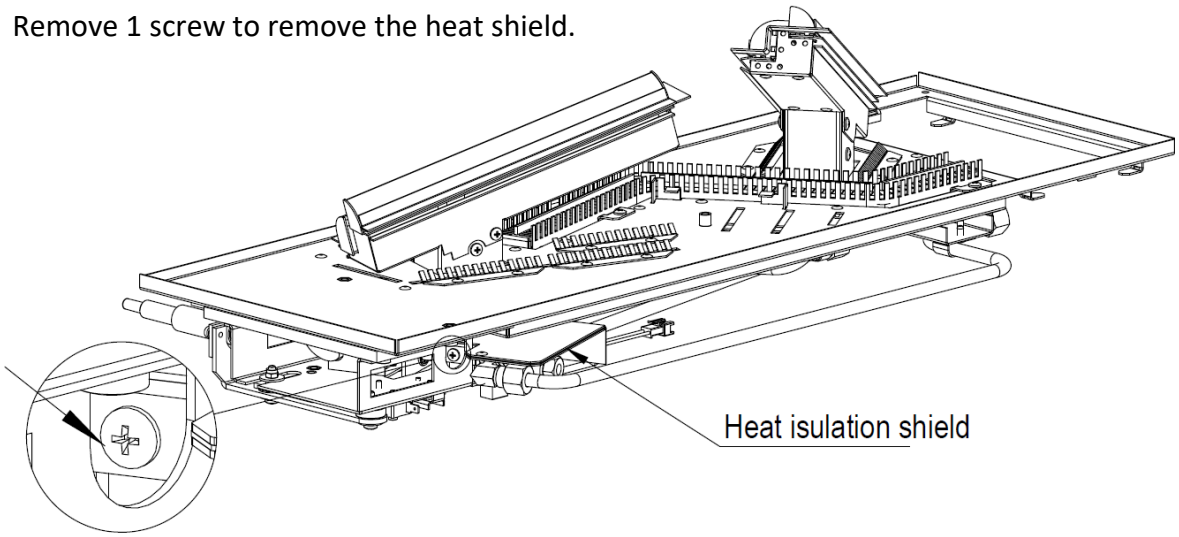

Remove the pilot tube.

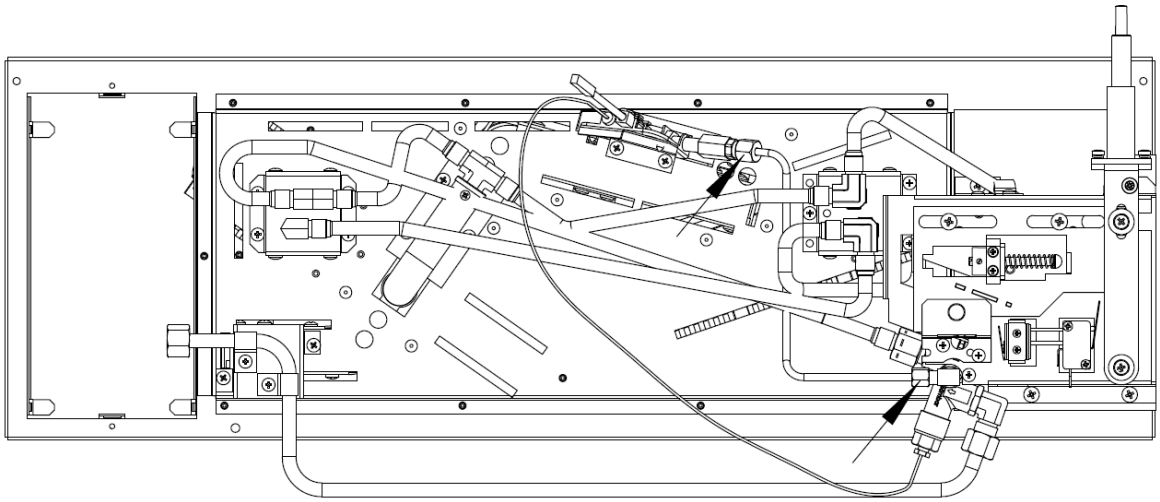

5.2 Remove of Slide Gas Valve—continued

Remove the 3 screws shown, then remove the thermocouple nut, the gas inlet tube nut and the main burner gas outlet nut. The valve can now be removed, serviced or replaced.

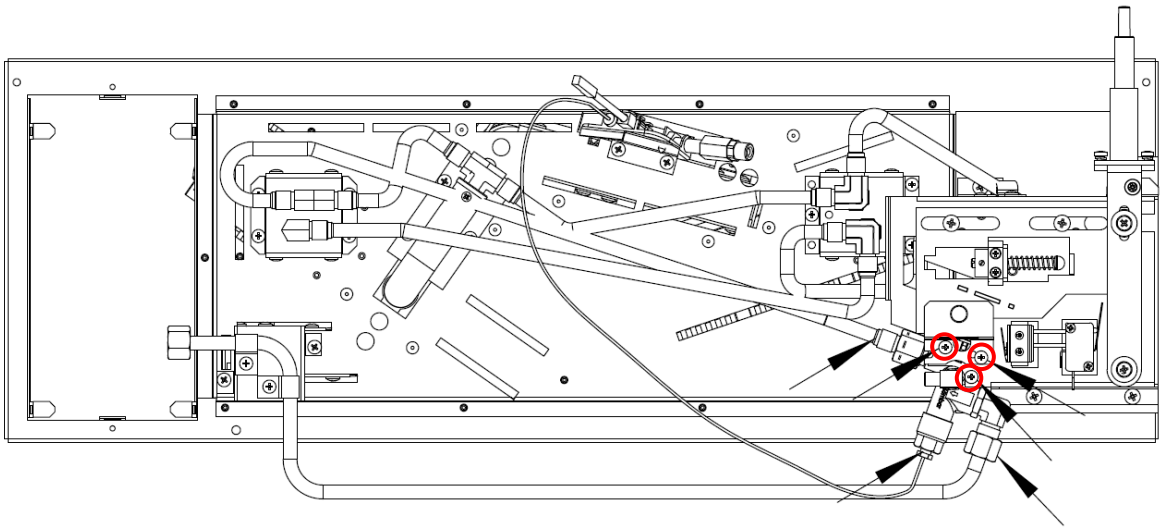

When reassembling the valve ensure that the washer sits in the gap as shown in the diagram

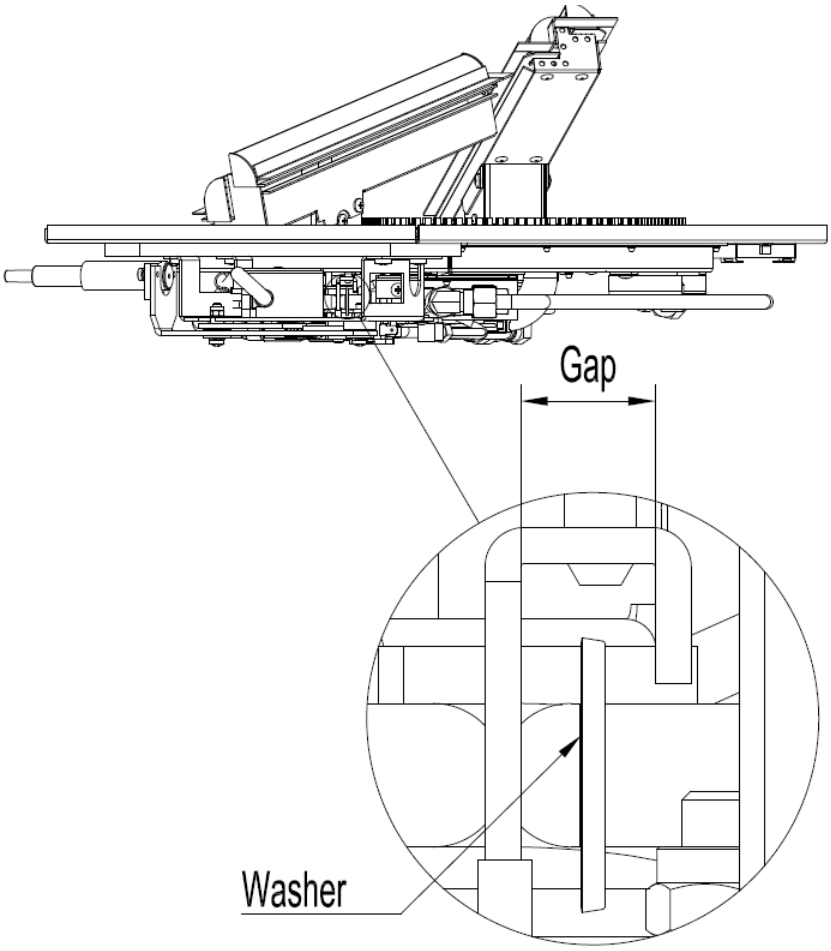

5.3 Remove of pilot assembly.

Remove the pilot gas supply nut, the thermocouple nut from the valve and the 5 screws as shown in the diagram below.

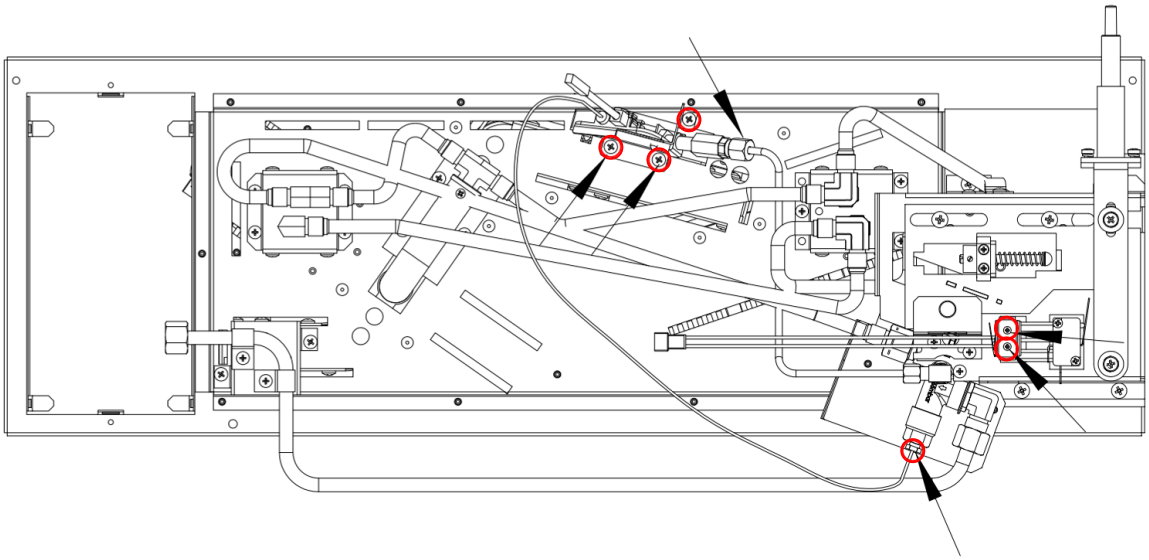

5.4 Remove of spark generator.

Remove the nut.

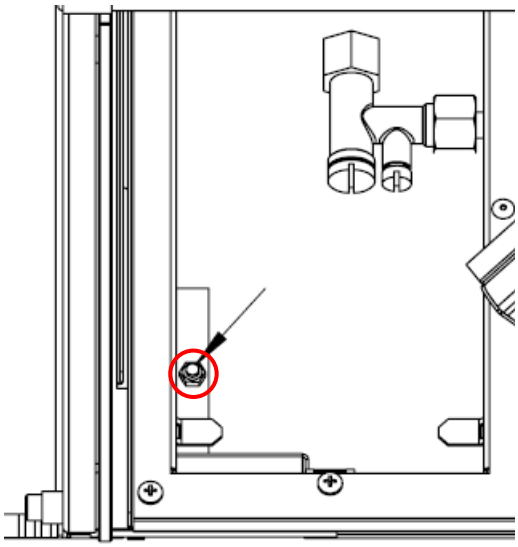

Remove the screw. Detach the black and white connector. The igniter cover can be removed. The igniter can now be removed.

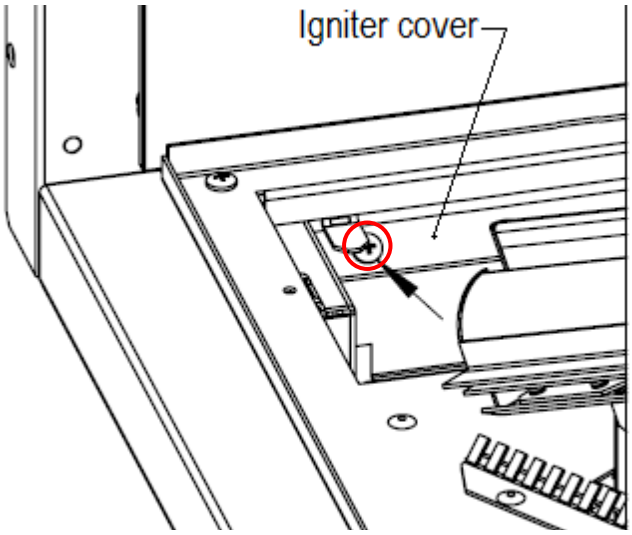

5.5 Removal of Tee valve (High Setting).

Remove the 17 screws as shown in the diagram below to release all pipework from the underside of the burner tray. Take care not to mix up the screws.

5 x self-tap silver screws marked ○

4 x M5 silver screws marked □

1 x M3 silver screw marked △

7 x self tap black screws.

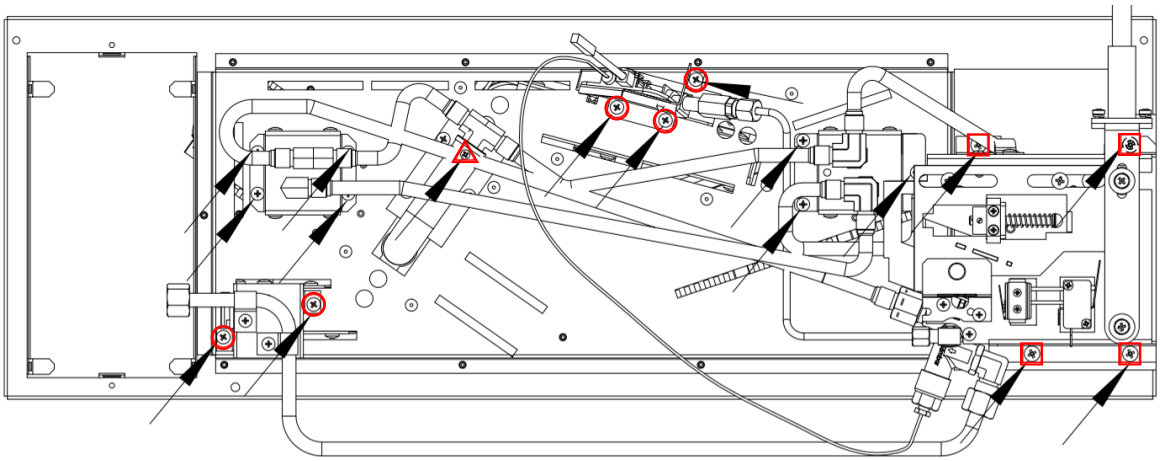

Remove 1 screw to allow removal of the heat shield as shown.

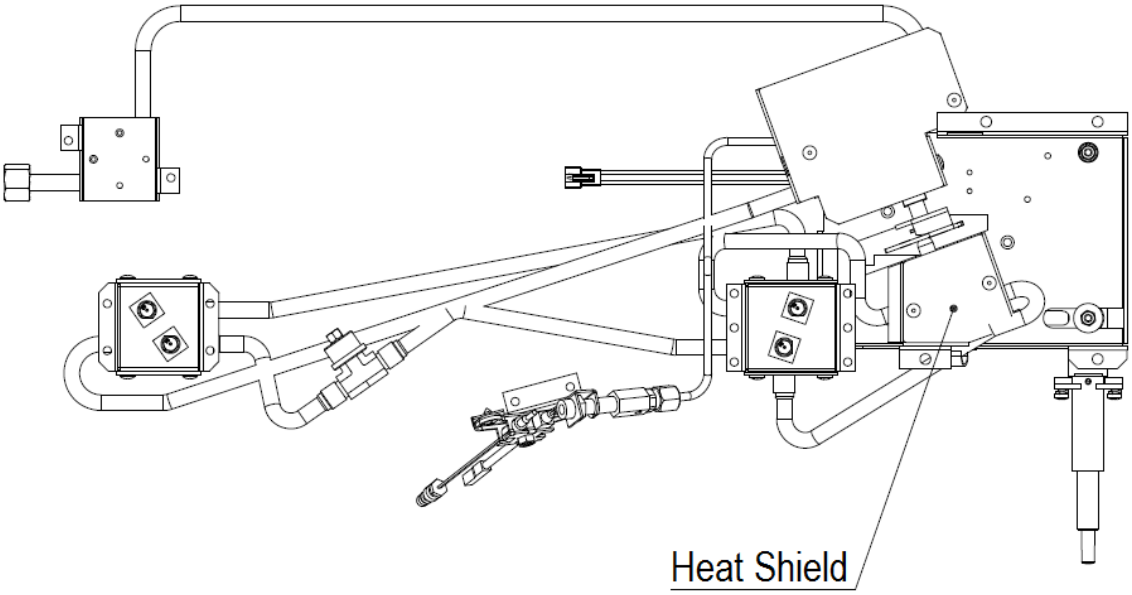

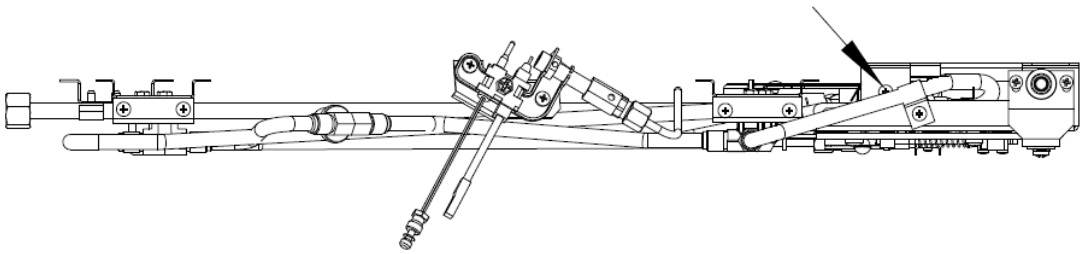

Removal of Tee valve (High Setting) - Continued

Remove the gas inlet and gas outlet nuts then remove the two nuts securing the tee valve to the underside of the burner tray.

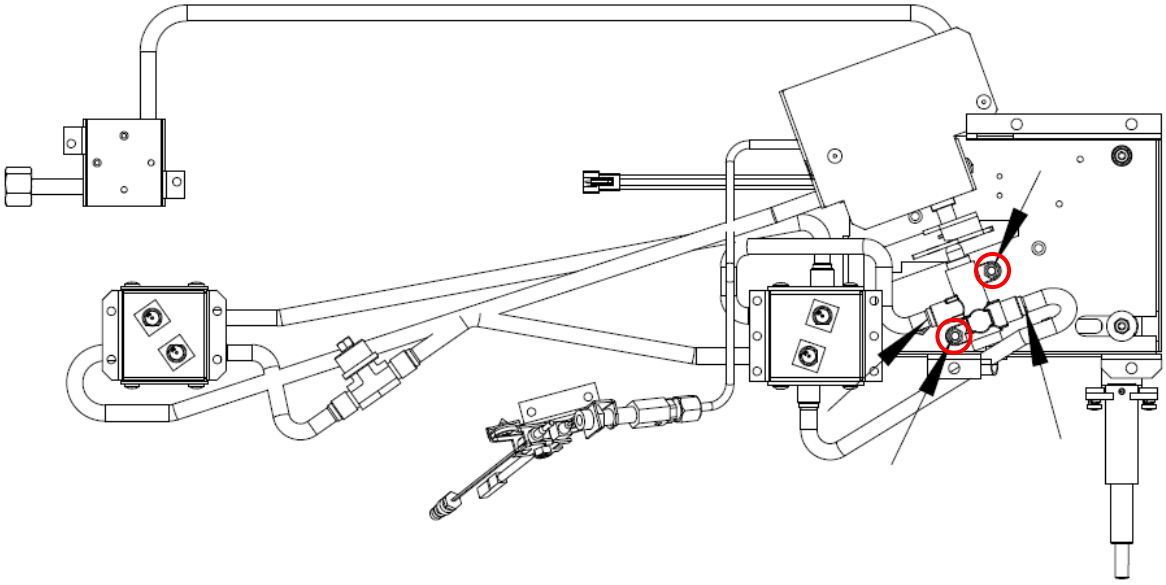

5.6 Removal of Injectors NATURAL GAS ONLY (G20)

Remove the 8 screws (4 each side) as shown in the diagram The two raised burners can now be removed

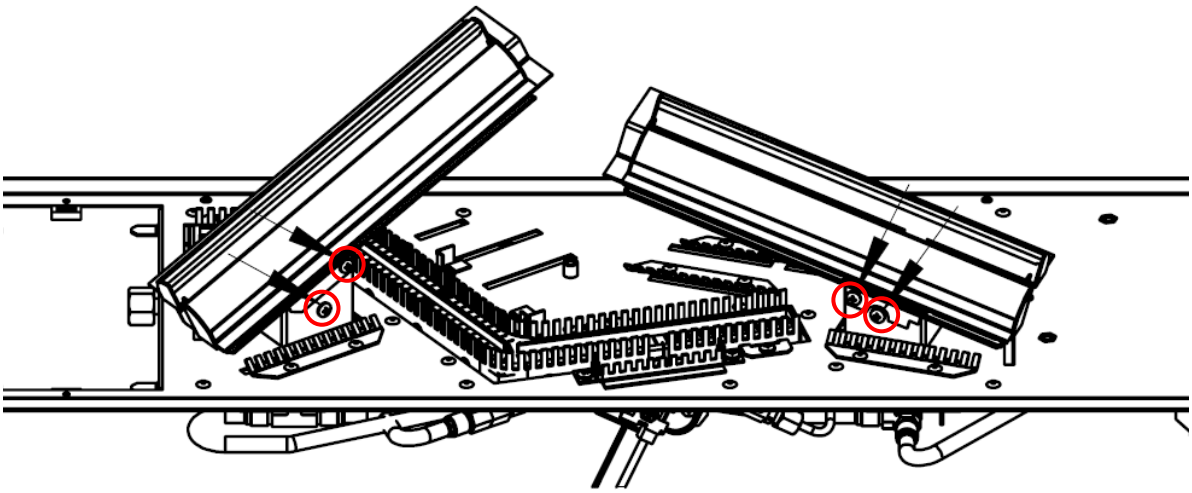

Removal of Injector - Continued **NATURAL GAS ONLY (G20)**

The 4 injectors can be accessed using the socket driver.

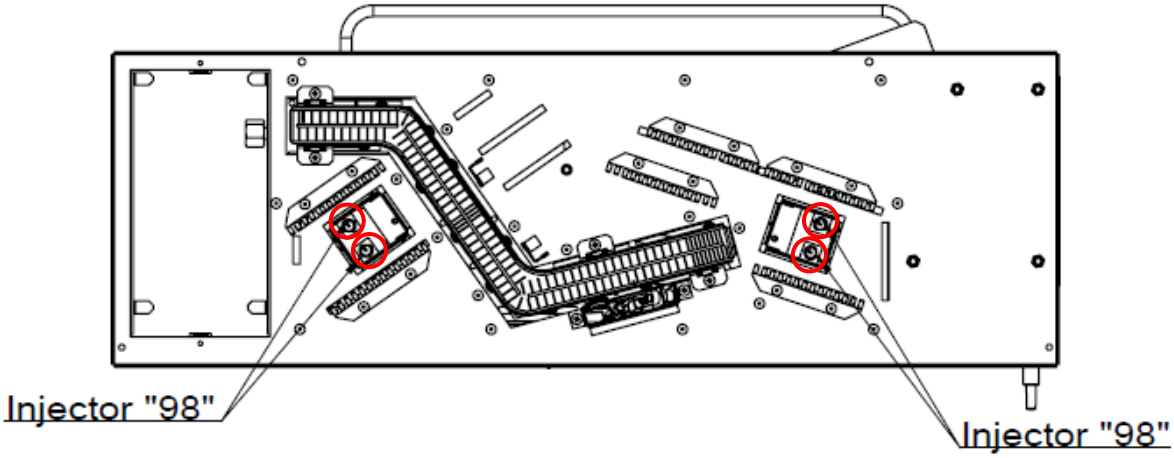

Finally remove the screw as shown below, The tee connector can be pulled out and the middle burner injector can be removed. This injector is marked 110.

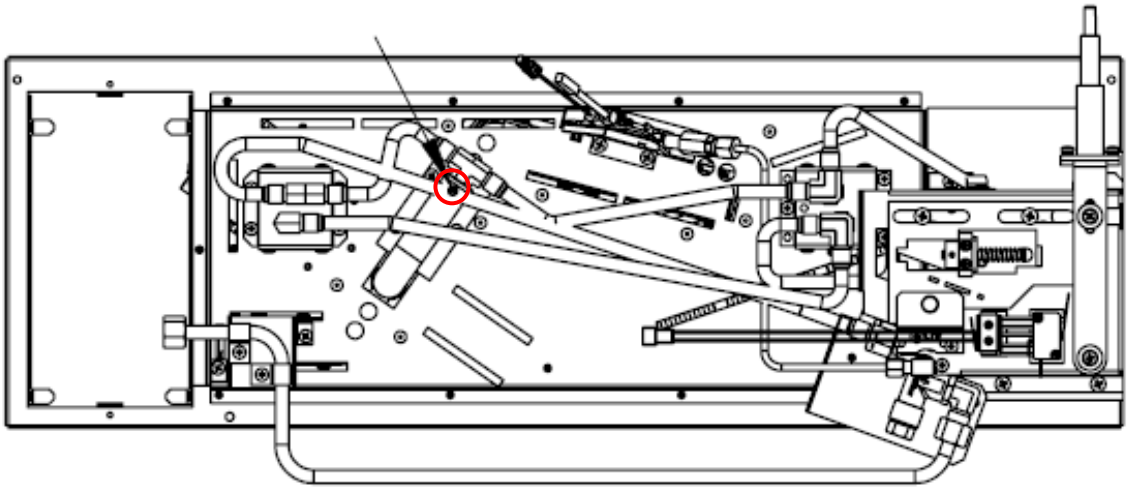

Removal of Injector - Continued PROPANE LPG GAS ONLY (G31)

Remove the 8 screws (4 each side) as shown in the diagram The two raised burners can now be removed.

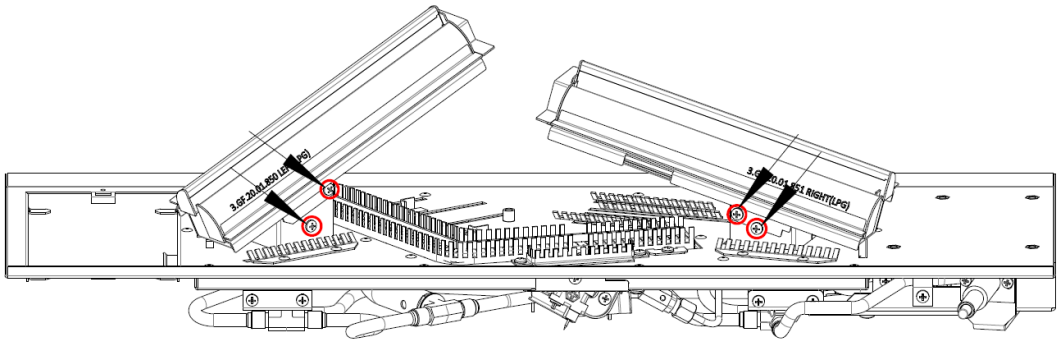

The 4 injectors can be accessed using the socket driver.

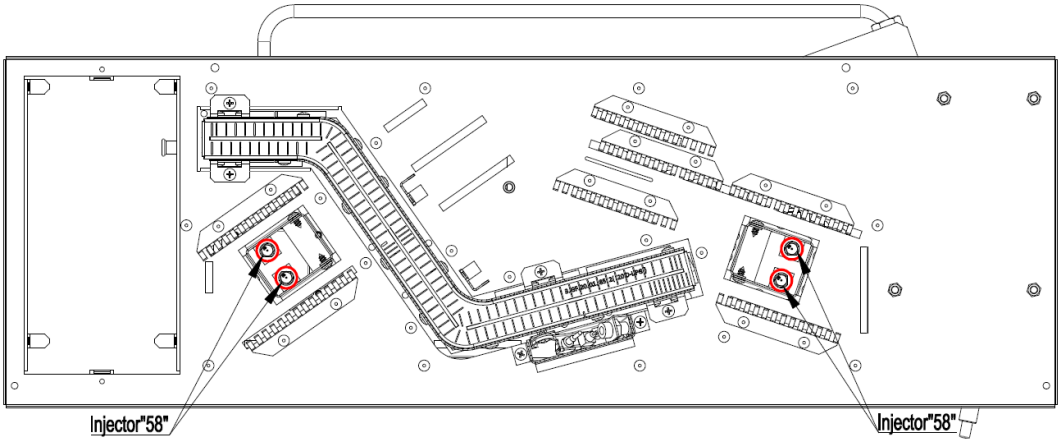

Finally remove the screw as shown below, The tee connector can be pulled out and the middle burner injector can be removed. This injector is marked 70.

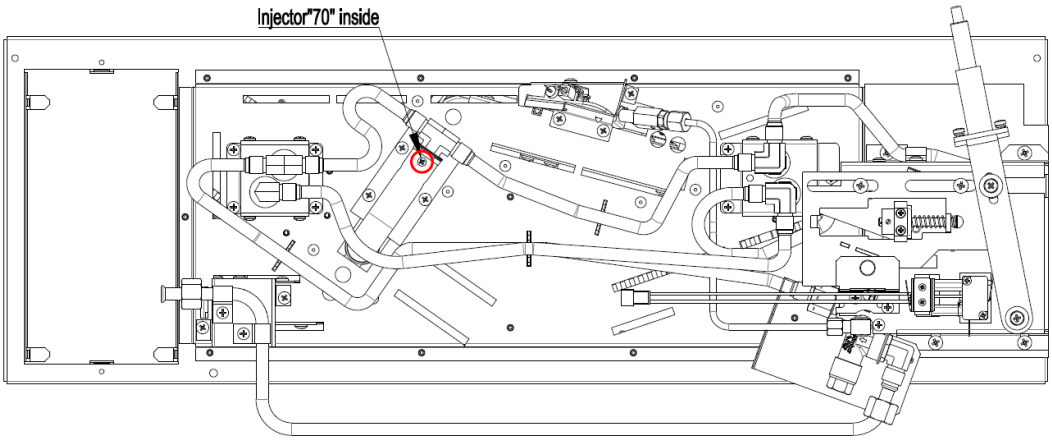

5.7 Removal of the Debris Access Cover.

Remove the 5 screws and the 3 nuts as shown in the diagram below to remove the access cover. This will reveal the access for debris removal.

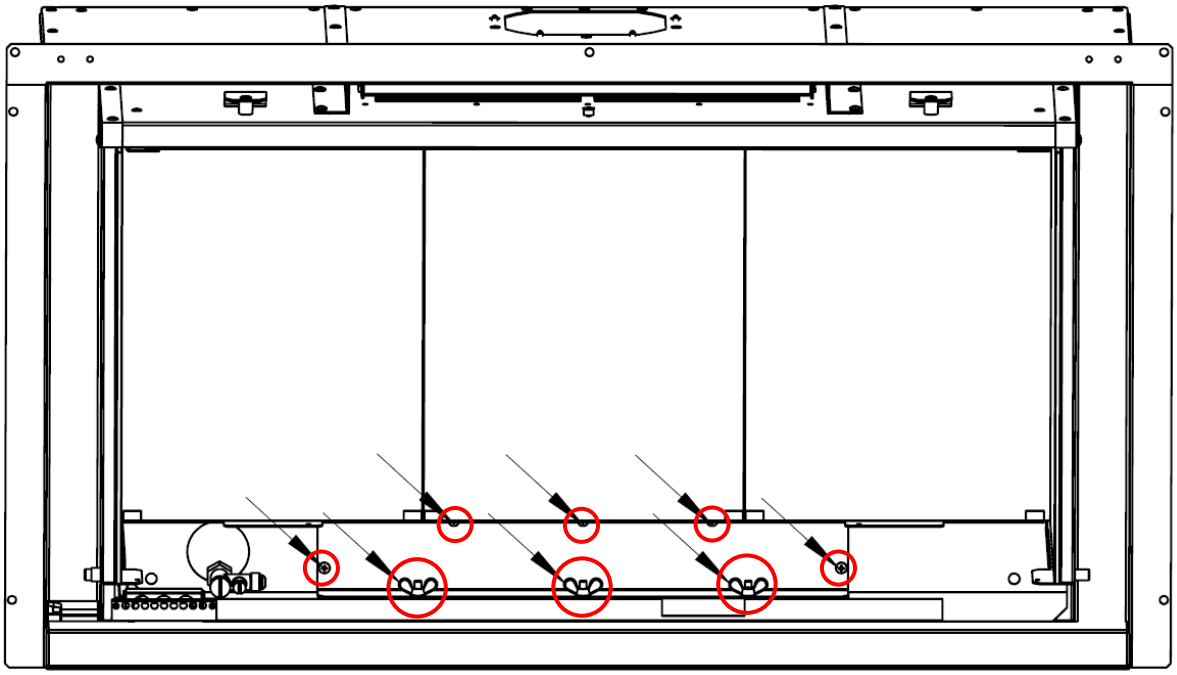

6.0 Record of annual services

The extended warranty of the specified components within this appliance is conditional on the annual service of the appliance by a Gas Safe registered engineer. Failure to maintain the product or to use the product in away which is not intended will void the manufacturer's warranty.

Ensure a record is kept of the annual services conducted by the Gas Safe engineer in the table below.

Service of this appliance must only be conducted by a Gas Safe registered engineer.

Annual Service Record		
YEAR 1	Gas Safe Engineer Name:	
	Gas Safe Engineer Registration No.:	
	Date of annual service:	
YEAR 2	Gas Safe Engineer Name:	
	Gas Safe Engineer Registration No.:	
	Date of annual service:	
YEAR 3	Gas Safe Engineer Name:	
	Gas Safe Engineer Registration No.:	
	Date of annual service:	
YEAR 4	Gas Safe Engineer Name:	
	Gas Safe Engineer Registration No.:	
	Date of annual service:	

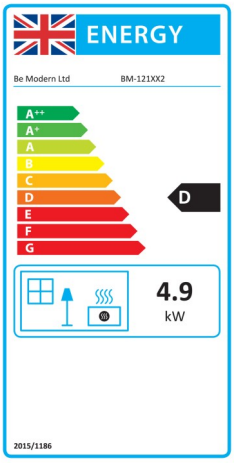

Product Fiche		
Manufacturer :	Be Modern Ltd	
Model No.	BM-121XX2	BM-122XX2
Fuel Type	Natural Gas I_{2H}	LPG Propane I_{3P}
Energy Efficiency Class	D	D
Indirect Heating Functionality	No	No
Direct Heat Output kW	4.9kW	5.0kW
Indirect Heat Output kW	N/A	N/A
EEI	73.3%	73.1%
Useful Energy Efficiency (NCV)	High : 82.3%	High : 82.1%
Useful Energy Efficiency (NCV)	N/A	N/A
Nominal Heat Output	High : 4.9kW	High : 5.0kW
Nominal Heat Output	Low : 3.2kW	Low : 3.0kW
Heat Output Temperature Control	Two Manual Stages	Two Manual Stages
Permanent Pilot Power (kW)	N/A	N/A
Space Heating Emissions NOx (GCV)	120mg/kWh	120mg/kWh

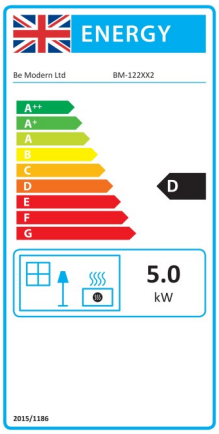

7.0 Important Note:

The energy efficiency class of this product is defined using a seasonal efficiency calculation which reduces the actual net efficiency of the product where the use of automated heat control, thermostats, window open sensors and timers are not used. This is not to be confused with the net efficiency, or useful efficiency of the appliance (shown in the tables above).

This product MUST be installed by a Gas Safe Registered Installer. Full details are provided in this manual.

Be Modern Ltd
Bede Industrial Estate,
Jarrow, Tyne & Wear, NE32 3BE

User Replaceable Parts

Part Number	Description
P-XX1231	Ceramic Log Set
P-XX1212A	Volcanic Rock Pack (2 PACKS)
P-XX1213	Ceramic Bark Pack (2 PACKS)
P-XX1234	Ember Wire Pack

It is important to note that the above spares are user serviceable components that can be changed by the customer. .

bemodern
FIRES I FIREPLACES

Be Modern Ltd
Bede Industrial Estate,
Jarrow, Tyne & Wear, NE32 3BE

www.bemodern.com

Tel: 0191 489 8006 Fax: 0191 580 0085

Email: sales@bemodern.com

UK CA CE UK NI

Due to our policy of continual product improvement, some diagrams and small details may not be accurate however if there is any concern or matter of understanding that you feel needs to be clarified please contact us directly. Our contact details are shown above.